Service Manual

LASER TALON & Eclipse

Volume-1
Engine, Chassis & Body

FOREWORD

This Service Manual has been prepared with the latest service information available at the time of publication. It is subdivided into various group categories and each section contains diagnosis, disassembly, repair, and installation procedures along with complete specifications and tightening references. Use of this manual will aid in properly performing any servicing necessary to maintain or restore the high levels of performance and reliability designed into these outstanding vehicles.

CHRYSLER CORPORATION

Chrysler Corporation reserves the right to make changes in design or to make additions to or improvements in its products without imposing any obligations upon itself to install them on its products previously manufactured.

© 1992 Mitsubishi Motors Corporation

Printed in U.S.A.

GROUP INDEX

N00AA-A

Introduction and Master Troubleshooting	
Lubrication and Maintenance	0
Front Suspension	2
Rear Axle	3
Brakes– Service / Parking	5
Clutch	6
Cooling	7
Engine *	9
Intake and Exhaust	11
Fuel System *	14
Propeller Shaft	16
Rear Suspension	17
Steering– Manual / Power	19
Transaxle– Manual / Automatic	21
Wheels and Tires	22
Body *	23
Heater & Air Conditioning	24
Emission Control Systems	25

NOTE: For Electrical, refer to Volume-2 "Electrical".

BRAKES

SERVICE AND PARKING

CONTENTS

N05AA--

ANTI-LOCK BRAKING SYSTEM TROUBLESHOOTING 9

BRAKE BOOSTER 71

BRAKE LINE 73

BRAKE PEDAL 63

ELECTRONIC CONTROL UNIT <VEHICLES WITH ABS> 102

FRONT DISC BRAKE 76

G-SENSOR <AWD-ABS> 101

HYDRAULIC UNIT <VEHICLES WITH ABS> 92

MASTER CYLINDER 67

PARKING BRAKES 103

REAR DISC BRAKE 85

SERVICE ADJUSTMENT PROCEDURES ... 47

- ABS Power Relay Check 62
- Bleeding 50
- Brake Booster Operating Inspection 49
- Brake Fluid Level Sensor Check 48
- Brake Pedal Inspection and Adjustment ... 47
- Check Valve Operation Check 49
- Flat Battery Remedy 62
- Front Disc Brake Pad Check and Replacement 51
- Front Disc Brake Rotor Inspection 53
- Inspection of Hydraulic Unit 59
- Measurement of Wheel Speed Sensor Output Voltage 57
- Parking Brake Lever Stroke Check 48
- Parking Brake Switch Check 49
- Proportioning Valve Function Test 50
- Rear Brake Disc Run-out Check 57
- Rear Brake Disc Run-out Correction 57
- Rear Brake Disc Thickness Check 56
- Rear Disc Brake Pad Check and Replacement 55
- Run-out Check 54
- Run-out Correction 54
- Thickness Check 55

SPECIAL TOOLS 6

SPECIFICATIONS 2

- General Specifications 2
- Lubricants 5
- Service Specifications 4
- Torque Specifications 4

TROUBLESHOOTING 7

WHEEL SPEED SENSOR <VEHICLES WITH ABS> 95

CAUTION

When servicing brake assemblies or components, do not create dust by sanding, grinding or by cleaning brake parts with a dry brush or with compressed air. A WATER DAMPENED CLOTH SHOULD BE USED. Many brake components contain asbestos fibers which can become air-borne if dust is created during service operations. Breathing dust which contains asbestos fibers can cause serious bodily harm.

SPECIFICATIONS

GENERAL SPECIFICATIONS <Non-Turbo>

N05C

Items		Vehicles without ABS	Vehicles with ABS
Master cylinder			
Type		Tandem type (with level sensor)	Tandem type (with level sensor)
I.D.	mm (in.)	22.2 (7/8)	23.8 (15/16)
Brake booster			
Type		Vacuum type	Vacuum type
Effective dia. of power cylinder	mm (in.)	230 (9.0)	Front side: 180 (7.0) Rear side: 205 (8.0)
Boosting ratio [Brake pedal depressing force]		5.0 [at 220 N (48 lbs.)]	5.5 [at 220 N (48 lbs.)]
Proportioning valve			
Type		Dual type	Dual type
Split point	kPa (psi)	4,200 (597)	4,200 (597)
Decompression ratio		0.3	3.3
Front brakes			
Type		Floating caliper, single-piston, ventilated disc (M-R44V)	Floating caliper, single-piston, ventilated disc (M-R44V)
Disc O.D.	mm (in.)	256 (10.1)	256 (10.1)
Disc thickness	mm (in.)	24 (.94)	24 (.94)
Pad thickness	mm (in.)	16.0 (.63)	16.0 (.63)
Wheel cylinder I.D.	mm (in.)	53.9 (2 1/8)	53.9 (2 1/8)
Clearance adjustment		Automatic	Automatic
Rear disc brakes			
Type		Floating caliper, single-piston, ventilated disc (AD30P)	Floating caliper, single-piston, ventilated. disc (AD30P)
Disc O.D.	mm (in.)	265 (10.4)	265 (10.4)
Disc thickness	mm (in.)	10 (.39)	10 (.39)
Pad thickness	mm (in.)	14.5 (.57)	14.5 (.57)
Wheel cylinder I.D.	mm (in.)	30.1 (1 3/16)	30.1 (1 3/16)
Clearance adjustment		Automatic	Automatic
Rotor teeth			
Front wheel side		–	47
Rear wheel side		–	47
Speed sensor		–	Magnet coil type
Parking brakes'			
Type		Mechanical brake acting on rear wheels	Mechanical brake acting on rear wheels
Brake lever type		Lever type	-ever type
Cable arrangement		V-type	V-type

<Turbo>

Items		FWD	AWD
Master cylinder			
Type		Tandem type (with level sensor)	Tandem type (with level sensor)
I.D.	mm (in.)	25.4 (1)	25.4 (1)
Brake booster			
Type		Vacuum type	Vacuum type
Effective dia. of power cylinder	mm (in.)	Front side: 188 (7.4) Rear side: 215 (8.5)	Front side: 188 (7.4) Rear side: 215 (8.5)
Boosting ratio [Brake pedal depressing force]		6.0 [at 220 N (48 lbs.)]	6.0 [at 220 N (48 lbs.)]
Proportioning valve			
Type		Dual type	Dual type
Split point	kPa (psi)	2,500 (363)	3,500 (508)
Decompression ratio		0.25	0.25
Front brakes			
Type		Floating caliper, single-piston, ventilated disc (M-R46V)	Floating caliper, double-piston ventilated disc (M-R56W)
Disc O.D.	mm (in.)	256 (10.1)	276 (10.9)
Disc thickness	mm (in.)	24 (.94)	24 (.94)
Pad thickness	mm (in.)	16.0 (.63)	16.0 (.63)
Wheel cylinder I.D.	mm (in.)	60.3 ($2\frac{3}{8}$)	41.3 ($1\frac{5}{8}$) × 2
Clearance adjustment		Automatic	Automatic
Rear disc brakes			
Type		Floating caliper, single-piston, ventilated disc (AD30P)	Floating caliper, single-piston, ventilated disc (AD35P)
Disc O.D.	mm (in.)	265 (10.4)	265 (10.4)
Disc thickness	mm (in.)	10 (.39)	10 (.39)
Pad thickness	mm (in.)	14.5 (.57)	14.5 (.57)
Wheel cylinder I.D.	mm (in.)	30.1 ($1\frac{3}{16}$)	34.9 ($1\frac{3}{8}$)
Clearance adjustment		Automatic	Automatic
Rotor teeth*			
Front wheel side		47	47
Rear wheel side		47	47
Speed sensor*		Magnet coil type	Magnet coil type
Parking brakes			
Type		Mechanical brake acting on rear wheels	Mechanical brake acting on rear wheels
Brake lever type		Lever type	Lever type
Cable arrangement		V-type	V-type

NOTE
The *symbol indicates vehicles with ABS.

SERVICE SPECIFICATIONS

N05CB-

Items		Specifications
Standard value		
Brake pedal height	mm (in.)	176–181 (6.9–7.1)
Brake pedal free play	mm (in.)	3-8 (.1–.3)
Brake pedal to floorboard clearance	mm (in.)	80 (3.1) or more
Parking brake lever stroke.		5-7 notches
Output pressure proportioning valve	MPa (psi)	
Split point		
<FWD>		3.95-4.45 (561–633)
<AWD>		3.45-3.95 (491–561)
Output pressure [input pressure]		
<FWD>		5.15-5.65 (732–804) [8.2 (1,163)]
<AWD>		4.65-5.15 (661–732) [7.7 (1,095))
Disc brake dragging force at hub bolt	N (lbs.) [Nm (ft.lbs.)]	70 (15) or less [4 (3) or less]
Booster push rod to master cylinder piston clearance	mm (in.)	
9 inch brake booster		0.8–1.0 (.031–.039)
7 + 8 inch brake booster		0.5–0.7 (.020–.028)
Speed sensor's internal resistance	kΩ	0.8–1.2*
Clearance between the speed pole piece and the toothed rotor	mm (in.)	0.3–0.9 (.012–.035)*
Limit		
Left/right proportioning valve out pressure difference	MPa (psi)	0.4 (57)
Disc brake pad thickness	mm (in.)	2.0 (.08)
Front disc thickness	mm (in.)	22.4 (.882)
Rear disc thickness	mm (in.)	8.4 (.331)
Disc runout	mm (in.)	
Front		0.07 (.0028)
Rear		0.08 (.0031)
Hub end play	mm (in.)	0.2 (.008)

NOTE
*: Vehicles with ABS

TORQUE SPECIFICATIONS

N05CC-

Items	Nm	ft.lbs.
Pedal support bracket installation bolts	8–12	6-9
Pedal support bracket installation nut	10–15	7–11
Pedal rod to pedal support bracket	17–26	12–19
Pedal rod to clutch pedal bracket	17-26	12–19
Clutch pedal bracket installation bolt	8-12	6-9
Turn-over spring mounting bolt	17-26	12–19
Stop lamp switch mounting nut	10–15	7-11
Clutch master cylinder installation nuts	10–15	7–11
Clutch pedal installation nut	20–25	14-18
Lever assembly (A) installation nut	20–25	14–18
Lever assembly (B) installation nut	20–25	14–18

Items	Nm	ft.lbs.
Master cylinder to brake booster	8-12	6-9
Piston stopper bolt	1.5–3.0	1–2
Nipple installation screw	1.5–3.0	1–2
Brake booster installation nuts	11–17	8–12
Fitting	15–18	11–13
Flared brake line nuts	13–17	9–12
Brake hose bracket installation bolts	17-26	12-19
Front disc brake assembly installation bolts	80–100	58-72
Lock pin (front)	64-86	46-62
Guide pin (front)	64-86	46-62
Bleeder screw	7-9	5-7
Wheel bearing nut	200–260	144–188
Dust shield to axle beam	9-14	7–10
Rear disc brake assembly installation bolts	50–60	36-43
Drive shaft to companion flange	55-65	39-47
Companion flange to rear axle shaft	160–200	116-159
Brake hose to caliper body (rear)	25-35	18–25
Lock pin (rear)	22-32	16–23
Guide pin (rear)	22-32	16–23
Spindle lever to parking brake lever	40–55	29–40
Rear speed sensor installation bolt	9-14	7–10
Speed sensor bracket installation bolt	9-14	7–10
Rotor to front hub	7–11	5–8
Rotor to rear hub	9–14	7–10

LUBRICANTS

N05CD--

Items	Specified lubricant
Brake fluid	MOPAR Brake Fluid/ Conforming to DOT3 or DOT4
Brake pedal bushing inner surface Clevis pin and washer Parking brake lever sliding parts Bushing inner surface	MOPAR Multi-mileage Lubricant Part No. 2525035 or equivalent

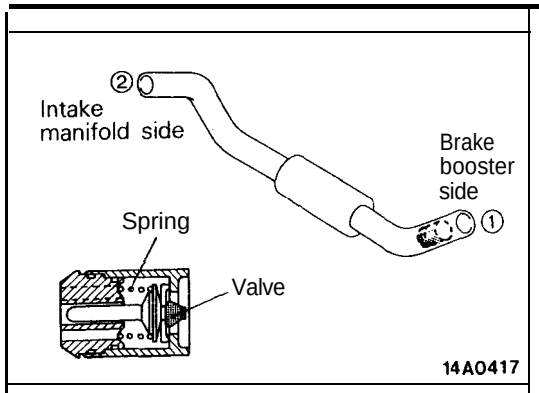

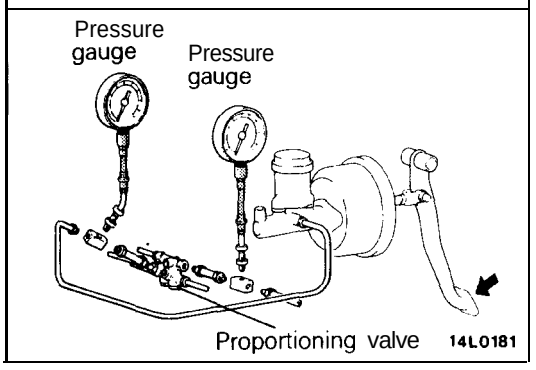

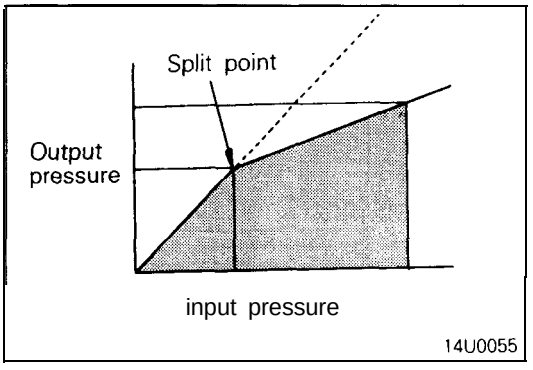

2. Check the operation of the check valve by using a vacuum pump.

Vacuum pump connection	Accept/reject criteria
Connection at the brake booster side ①	A negative pressure (vacuum) is created and held.
Connection at the -intake manifold side ②	A negative pressure (vacuum) is not created.

Caution
If the check valve is defective, replace it as an assembly unit together with the vacuum hose.

PROPORTIONING VALVE FUNCTION TEST N05FKAJ

1. Connect two pressure gauges, one each to the input side and output side of the proportioning valve, as shown,
2. Air bleed the brake line and the pressure gauge.
3. While gradually depressing the brake pedal, make the following measurements and check to be sure that the measured values are within the allowable range.
   (1) Output pressure begins to drop relative to input pressure (split point).

   Standard value:

<FWD>	**3.95-4.45 MPa (561-633 psi)**
<AWD>	**3.45-3.95 MPa (491-561 psi)**

   (2) Output fluid pressure when input fluid pressure are as follows.

   Standard value:

<FWD>	**5.15-5.65 MPa (732–804 psi) [at 8.2 MPa (1,163 psi))**
<AWD>	**4.65-5.15 MPa (661-732 psi) [at 7.7 MPa (1,095 psi)]**

   (3) Output pressure difference between left and right brake lines

   Limit: 0.4 MPa (57 psi)
4. If the measured pressures are not within the permissible ranges, replace the proportioning valve.

BLEEDING N05FVAN

When the master cylinder is empty of brake fluid, bleed air from the master cylinder by proceeding with procedures (1) thru (6). (Because this master cylinder is not equipped with a check valve.)
When brake fluid remains in the master cylinder, proceed with step (6).

(1) Disconnect the brake tube from the master cylinder.
(2) Two persons should conduct the air bleeding, one person slowly depressing the brake pedal and holding the pedal depressed.

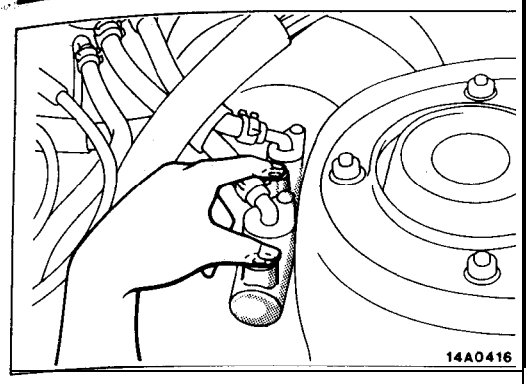

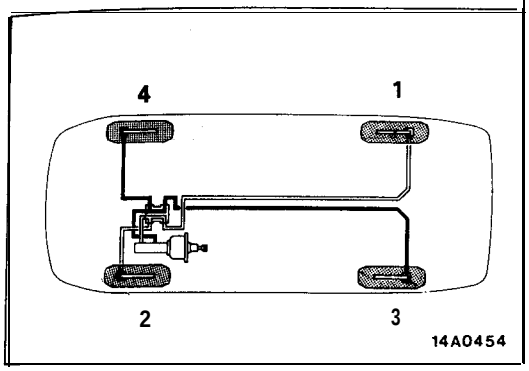

(3) In this condition, the other person should use a finger to close the outlet part of the, master cylinder, and then the first person should release the brake pedal.
(4) Steps (2) and (3) should be repeated three or four times, and then the master cylinder should be filled with brake fluid to the specified level.

NOTE
The air is completely bled from the master cylinder by steps (1) to (4).

(5) Connect the brake tube to the master cylinder.
(6) Start the engine; then, in the sequence shown in the illustration, bleed the air from each wheel cylinder.

Specified brake fluid: MOPAR Brake Fluid/ Conforming to DOT3 or DOT4

Caution
1. **Use the specified brake fluid. Avoid using a mixture of the specified brake fluid and other fluid.**
2. **If brake fluid is exposed to the air, it will absorb moisture; as water is absorbed from the atmosphere, the boiling point of the brake fluid will decrease and the braking performance will be seriously impaired. For this reason, use a hermetically sealed 1 lit. (1.06 qt.) or 0.5 lit. (0.52 qt.) brake fluid container.**
3. **Firmly close the cap of the brake fluid container after use.**
4. **For vehicles with the anti-lock braking system, be sure to install a filter to the master cylinder reservoir tank when supplying brake fluid.**

ORDINARY AIR-BLEEDING PROCEDURES

(1) Depress the brake pedal several times until resistance is felt; then, with the pedal depressed, loosen the bleeder screw 1/3 to 1/2 turn and then tighten it before the fluid pressure is all gone.
(2) Release the brake pedal. Repeat this procedure until there are no more air bubbles in the brake fluid.

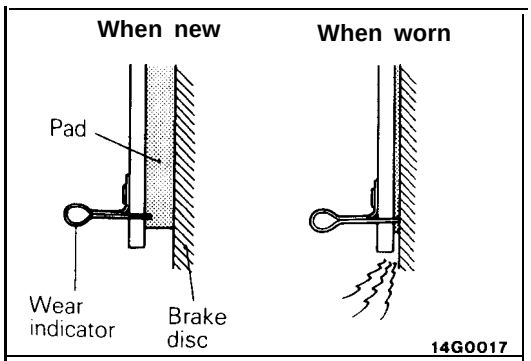

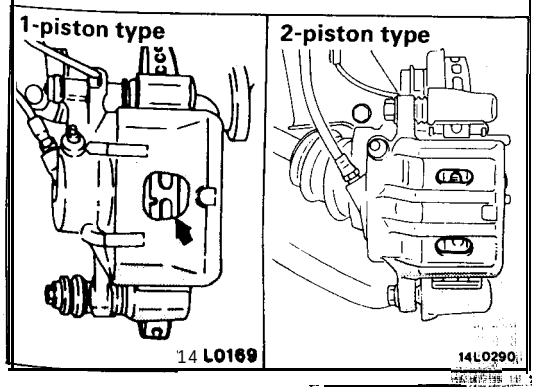

FRONT DISC BRAKE PAD CHECK AND REPLACEMENT

N05FQAF

NOTE
The brake pads have wear indicators that contact the brake disc when the brake pad thickness becomes 2 mm (.08 in.), and emit a squealing sound to warn the driver.

1. Check brake pad thickness through caliper body check port.

Standard value: 10.0 mm (.39 in.)
Limit: 2.0 mm (.08 in.)

Caution
1. **When the limit is exceeded, replace the pads at both sides, and also the brake pads for the wheels on the opposite side at the same time.**
2. **If there is a significant difference in the thicknesses of the pads on the left and right sides, check the sliding condition of the piston, lock pin sleeve and guide pin sleeve.**

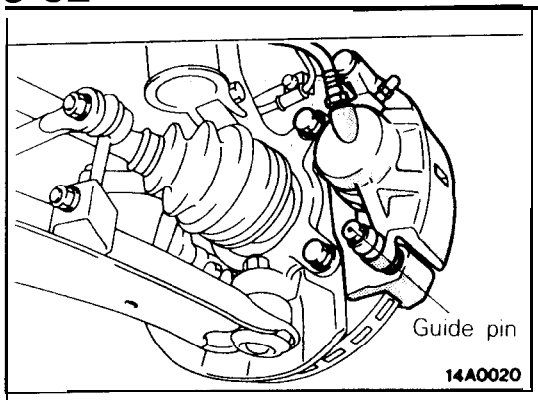

2. Remove guide pin. Lift caliper assembly and retain with wires.

Caution
Do not wipe off the special grease that is on the guide pin or allow it to contaminate the guide pin.

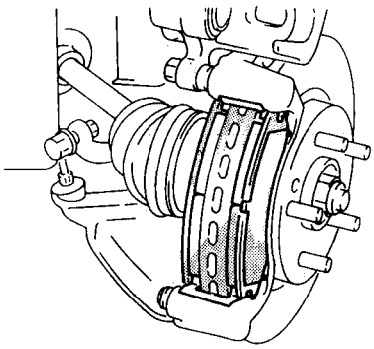

3. Remove the following parts from caliper support.
   ① Pad &wear indicator assembly
   ② Pad assembly
   ③ Clip
   ④ Inner shim
   ⑤ Outer shim

1 -piston type

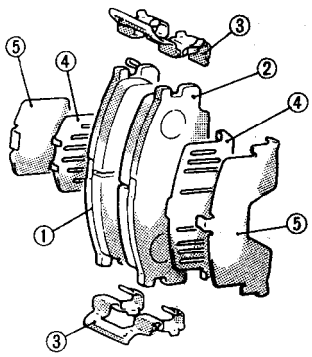

P-piston type

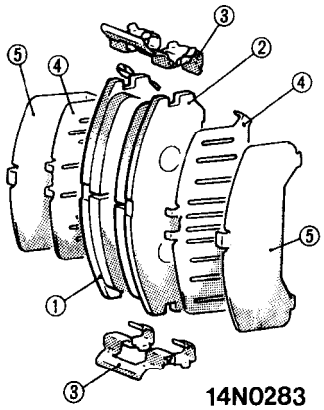

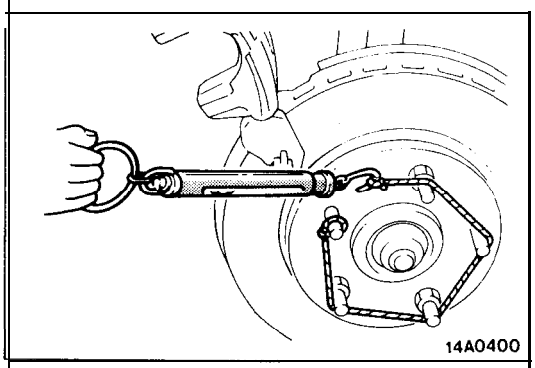

4. With the pad removed, use a spring balance to measure the rotation sliding resistance of the hub in the forward direction.

   NOTE
   Tighten the nuts in order to secure the disc to the hub.

5. Securely attach the pad clip to the caliper support.

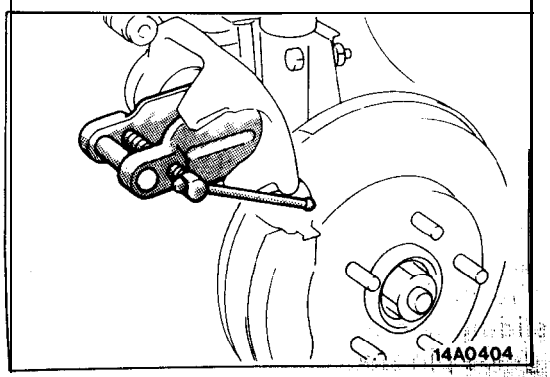

6. Clean piston and insert into cylinder with tool.
7. Be careful that the piston boot does not become caught, when lowering the caliper assembly and install the guide pin.

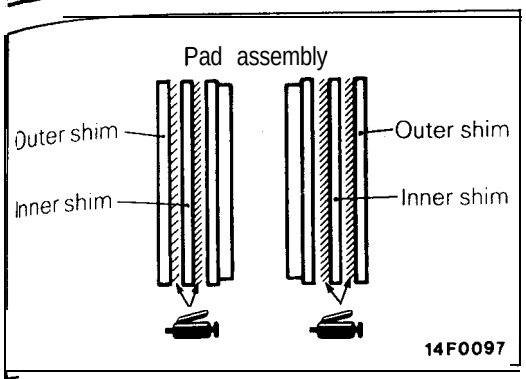

8. Apply repair kit grease to both sides of the inner shims.

Specified grease: Brake grease SAE J310, NLGI No.1

Caution

1. **Make sure that the friction surfaces of pads and brake discs and free of grease and other contaminants.**
2. **The grease should never squeeze out from around the shim.**

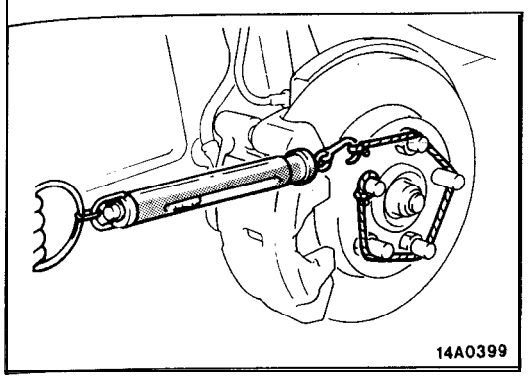

9. Check the disc brake drag force as follows.
   (1) Start the engine, and after depressing the brake pedal hard two or three times, stop the engine.
   (2) Turn brake disc forward 10 times.
   (3) Use a spring balance to measure the rotation Sliding resistance of the hub in the forward direction.
   (4) Calculate the drag torque of the disc brake (difference between measured values in 3 and 4).

   Standard value: 70 N (15.4 lbs.) or less

10. If the disc brake drag force exceeds the standard value, disassemble piston and clean the piston. Check for corrosion or worn piston seal, and check the sliding condition of the lock pin and guide pin.

FRONT DISC BRAKE ROTOR INSPECTION

CAUTION

When servicing disc brakes, it is necessary to exercise caution to keep the disc brakes within the allowable service values in order to maintain normal brake operation.

Before re-finishing or re-processing the brake disc surface, the following conditions should be checked.

Inspection items	Remarks
Scratches, rust, saturated lining materials and wear	• If the vehicle is not driven for a certain period, the sections of the discs that are not in contact with lining will become rusty, causing noise and shuddering. • If grooves resulting from excessive disc wear and scratches are not removed prior to installing a new pad assembly, there will momentarily be inappropriate contact between the disc and the lining (pad).
Run-out or drift	Excessive run-out or drift of the discs will increase the pedal depression resistance due to piston knock-back.
Change in thickness (parallelism)	If the thickness of the disc changes, this will cause pedal pulsation, shuddering, and surging.
Inset or warping (flatness)	Overheating and improper handling while servicing will cause inset or warping.

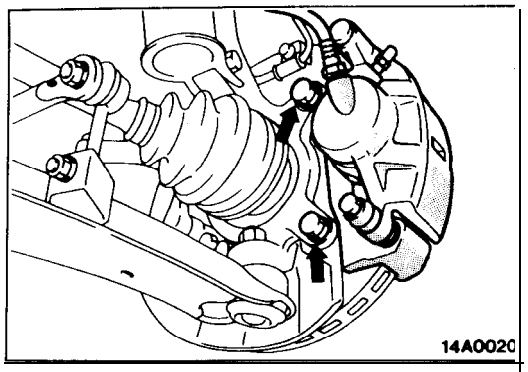

RUN-OUT CHECK

N05F

1. Remove the caliper support; then raise the caliper assembly upward and secure by using wire.
2. Inspect the disc surface for grooves, cracks, and rust. Clean the disc throughly and remove all rust.

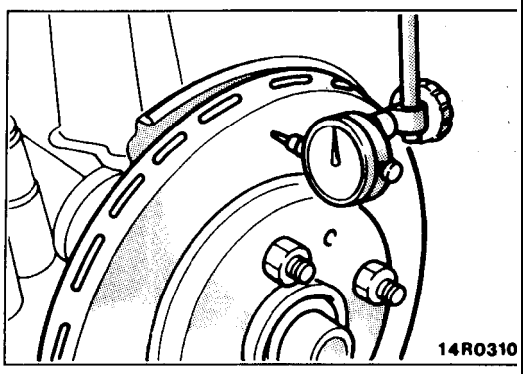

3. Place a dial gauge approximately 5 mm (.2 in.) from the outer circumference of the brake disc, and measure the run-out of the disc.

   Limit: 0.07 mm (.0028 in.)

   NOTE
   Tighten the nuts in order to secure the disc to the hub..

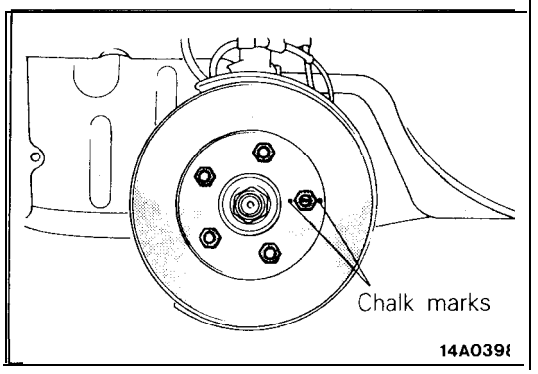

RUN-OUT CORRECTION

N05FTA8

1. If the run-out of the brake disc is equivalent to or exceeds the limit specification, change the phase of the disc and hub, and then measure the run-out again.
   (1) Before removing the brake disc, chalk both sides of the wheel stud on the side at which run-out is greatest.

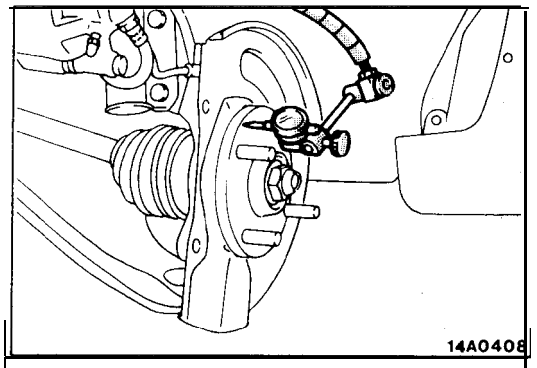

   (2) Remove the brake disc, and then place a dial gauge as shown in the illustration; then move the hub in the axial direction and measure the play.

   Limit: 0.2 mm (.008 in.)

   If the play is equivalent to or exceeds the limit, disassemble the hub knuckle and check each part.

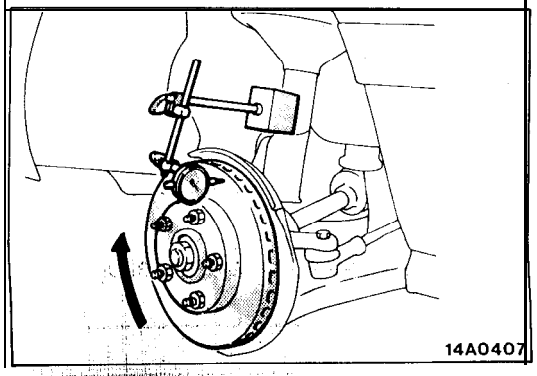

   (3) If the play does not exceed the limit specification, and then check the run-out of the brake disc once again. Mount the brake disc on the position dislocated from the chalk mark.
2. If the run-out cannot be corrected by changing the phase of the brake disc, replace the disc or turn rotor with on the car type brake lathe (MAD DL-8700PF or equivalent).'

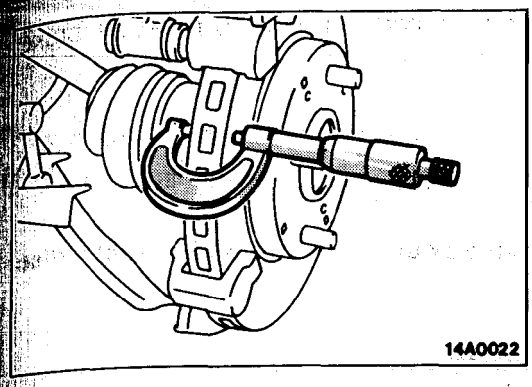

THICKNESS CHECK

1. Using a micrometer, measure disc thickness at eight positions, approximately 45" apart and 10 mm (.39 in.) in from the outer edge of the disc.

   Brake Disc Thickness
   Standard value: 24 mm (.94 in.)
   Limit: 22.4 mm (.882 in.)
   Thickness Variation (At least 8 position)
   The '*difference between any thickness. measurements should not be more than 0.015 mm (.0006 in.).

2. If the disc is beyond the limits for thickness, remove it and install a new one. If thickness variation exceeds the specification, replace the disc or turn. rotor with on the. car type brake lathe (MAD, DL-8700PF or equivalent).

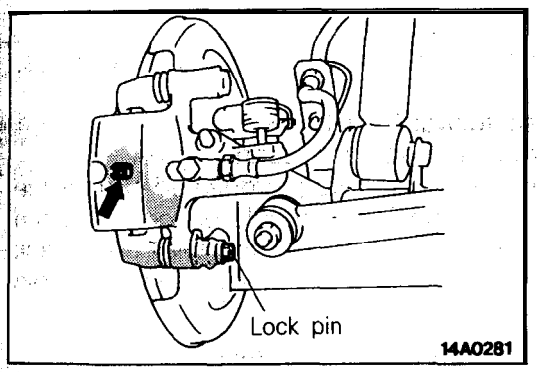

REAR DISC BRAKE PAD CHECK AND REPLACEMENT

N05FUAD

1. Check brake pad thickness through, caliper body check port.

   Limit: 2.0 mm (.08 in.)

   Caution
   1. **When the limit is exceeded, replace the pads at both sides, and also the brake pads for the wheels on the opposite side at the same time.**
   2. **If there is a significant difference in the thicknesses of the pads on the left and right sides, check the sliding condition of the piston, 'lock pin sleeve and guide pin sleeve.**

2. Loosen the parking brake cable (from the vehicle interior), and disconnect the parking brake end installed to the rear brake assembly.
3. Remove lock pin. Lift caliper assembly and retain with wires.

   Caution
   Do not wipe off. the special grease that is on the lock pin or allow it to contaminate the lock pin.

4. Remove. the- following parts from caliper support.

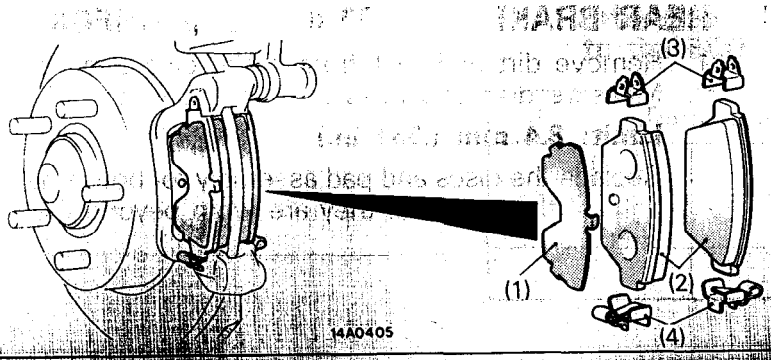

(1) Outer shim
(2) Pad assembly
(3) Pad clips C
(4) Pad clips B

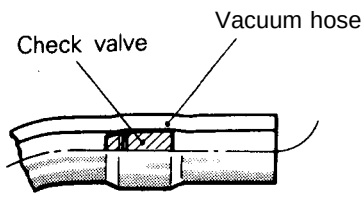

14A0394

SERVICE POINTS OF REMOVAL

N05JB

6. REMOVAL OF VACUUM HOSE WITH CHECK VALVE

NOTE
Since the check valve is fit to the vacuum hose, replace the check valve as an assembly unit together with the vacuum hose if the check valve is defective.

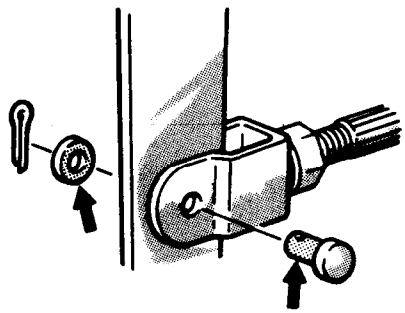
14U0050

SERVICE POINTS OF INSTALLATION

N05JDA

10. APPLICATION OF GREASE TO CLEVIS PIN/9. WASHER

After applying the specified grease to the clevis pin and washer, insert the clevis pin and bend the cotter pin tightly.

Grease: MOPAR Multi-mileage Lubricant
Part No. 2525035 or equivalent

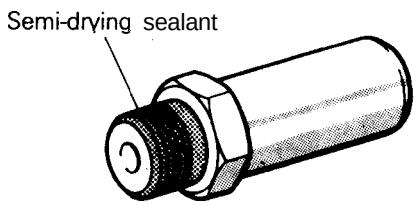

14Y626

7. APPLICATION OF SEALANT TO FITTING

When installing the vacuum hose fitting, apply semi-drying sealant to its threaded portion.

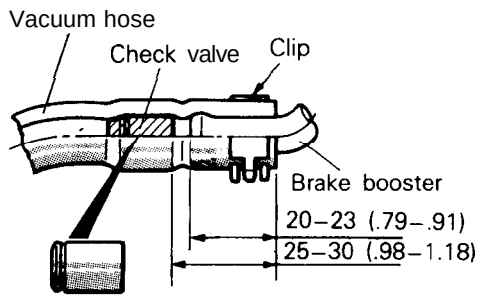

14A0395

6. INSTALLATION OF VACUUM HOSE WITH CHECK VALVE

(1) Attach the vacuum hose so that it may be inserted to a dimension illustrated.

Caution
Prevent interference between the check valve and brake booster.

(2) The vacuum hose at the engine should be securely connected until it contacts the hexagonal edge of the fitting, and then should be secured by the hose clip.

BRAKE LINE

REMOVAL AND INSTALLATION

N05KA--

Vehicles without ABS

Pre-removal Operation
*Draining of Brake Fluid

Post-installation Operation
- Supplying Brake Fluid
- Bleeding (Refer to P.5-50.)

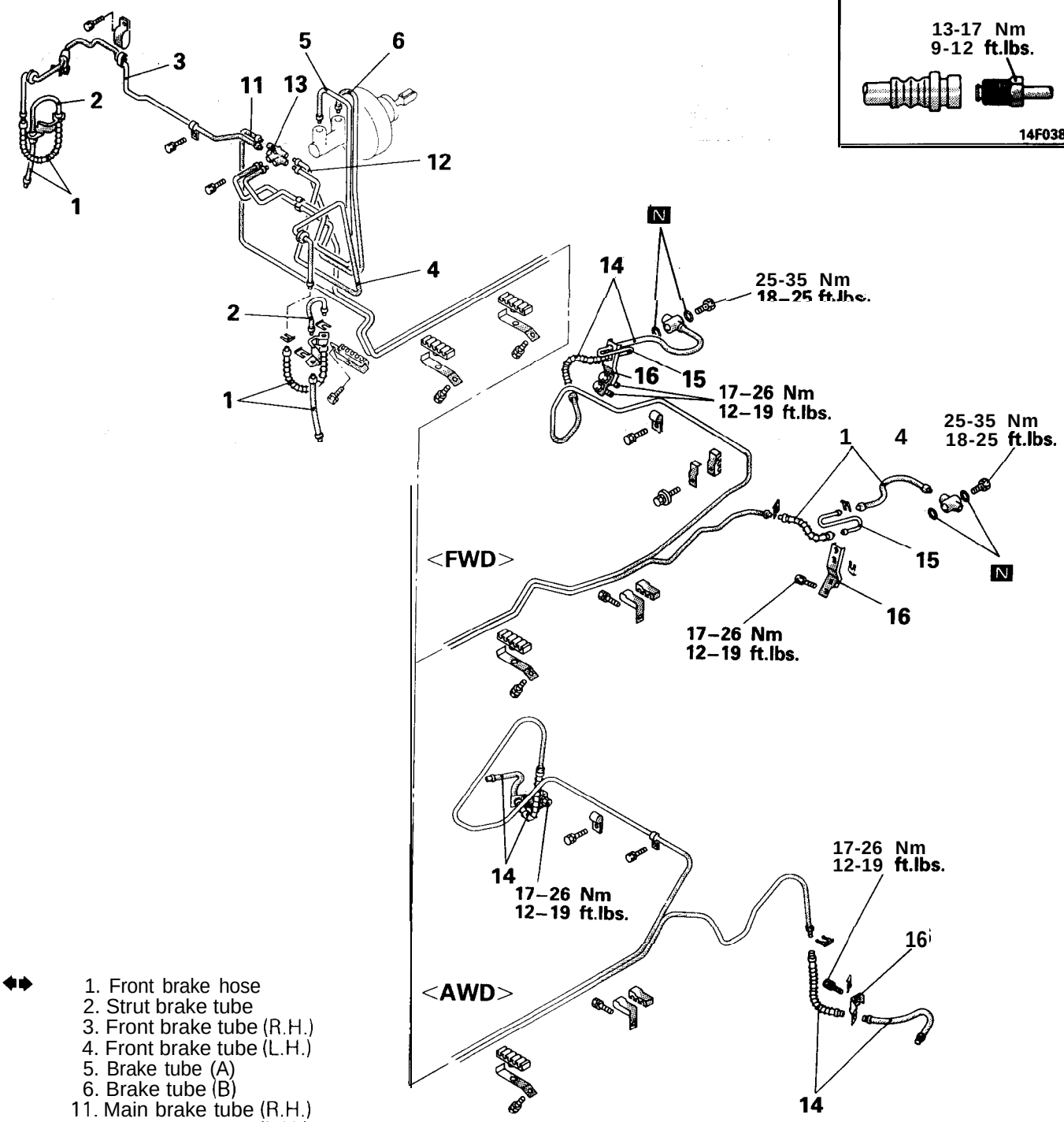

1. Front brake hose
2. Strut brake tube
3. Front brake tube (R.H.)
4. Front brake tube (L.H.)
5. Brake tube (A)
6. Brake tube (B)
11. Main brake tube (R.H.)
12. Main brake tube (L.H.)
13. Proportioning valve
14. Rear brake hose
15. Rear axle brake tube
16. Bracket

Vehicles with ABS

Pre-removal Operation
*Draining of Brake Fluid

Post-installation Operation
@Supplying Brake Fluid
● Bleeding (Refer to P.5-50.)

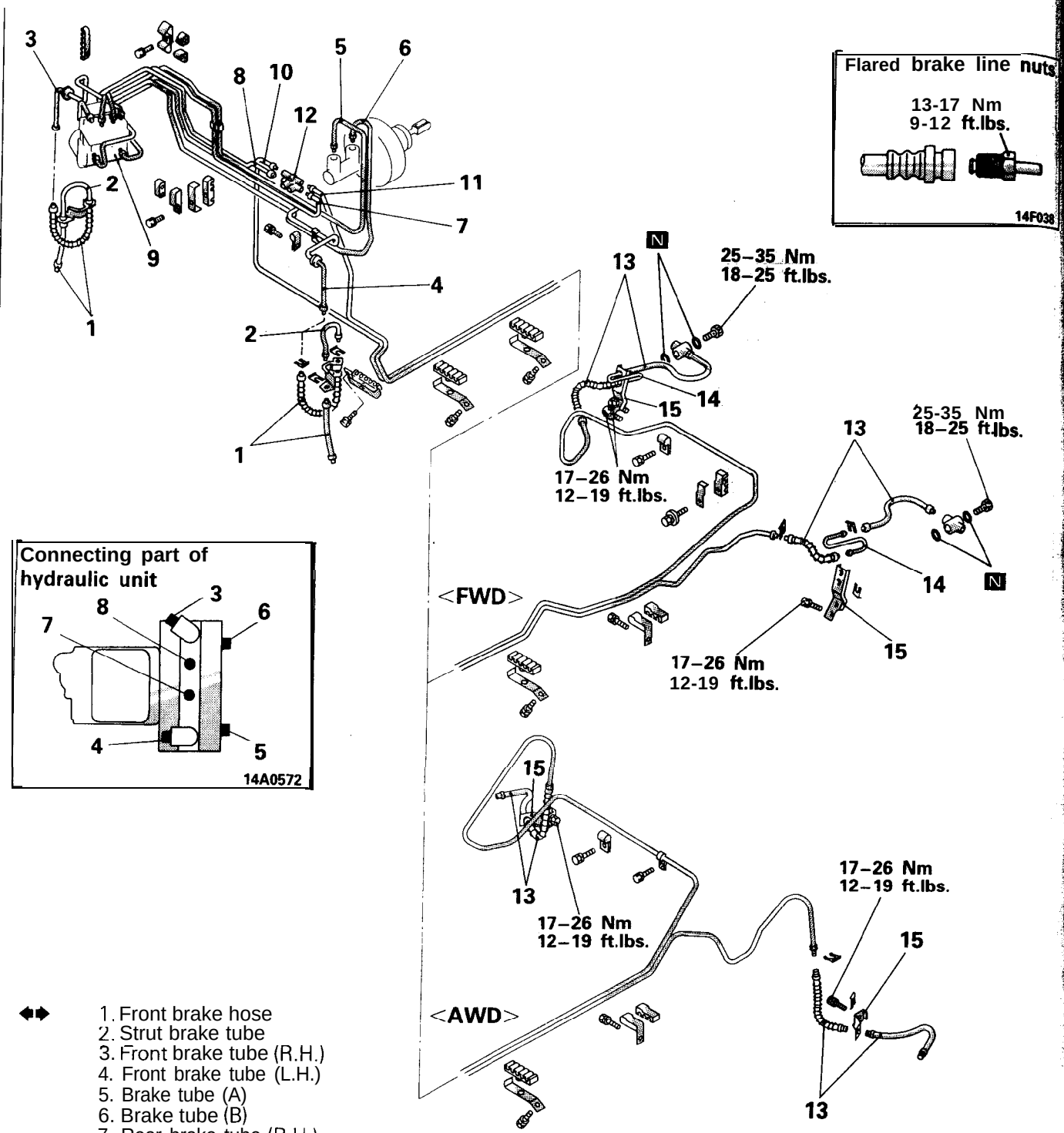

1. Front brake hose
2. Strut brake tube
3. Front brake tube (R.H.)
4. Front brake tube (L.H.)
5. Brake tube (A)
6. Brake tube (B)
7. Rear brake tube (R.H.)
8. Rear brake tube (L.H.)
9. Hydraulic unit
10. Main brake tube (R.H.)
11. Main brake tube (L.H.)
12. Proportioning valve
13. Rear brake hose
14. Rear axle brake tube
15. Bracket

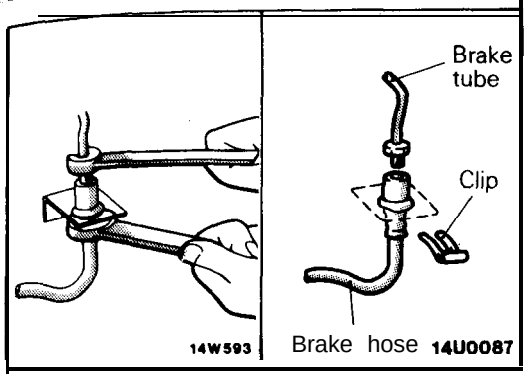

SERVICE POINTS OF REMOVAL N05KBAMe

1. REMOVAL OF FRONT BRAKE HOSE / 13. REAR BRAKE HOSE

(1) Holding the lock nut on the brake hose side, loosen the flared brake line nut.
(2) Pull off the brake hose clip and remove the brake hose from the bracket.

12. REMOVAL OF PROPORTIONING VALVE

Do not disassemble the proportioning valve because its performance depends on the set load of the spring.

INSPECTION N05KCAA

- Check the brake tubes for cracks, crimps and corrosion.
- Check the brake hoses for cracks, damage and leakage.
- Check the flared brake line nuts for damage and leakage.

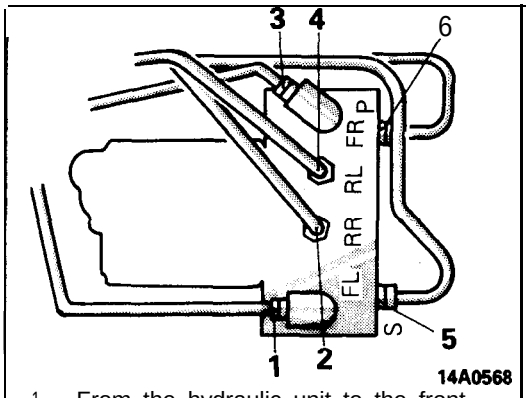

1. From the hydraulic unit to the front brake (L.H.)
2. From the hydraulic unit to the proportioning valve (Rear, R.H.)
3. From the hydraulic unit to the front brake (R.H.)
4. From the hydraulic unit to the proportioning valve (Rear, L.H.)
5. From the master cylinder (for left front and right rear)
6. From the master cylinder (for right front and left rear)

SERVICE POINTS OF INSTALLATION N05KDAJ

9. CONNECTION OF TUBE TO HYDRAULIC UNIT

Connect the tubes to the hydraulic 'unit as shown in the illustration.

FRONT DISC BRAKE

REMOVAL AND INSTALLATION

N05LA

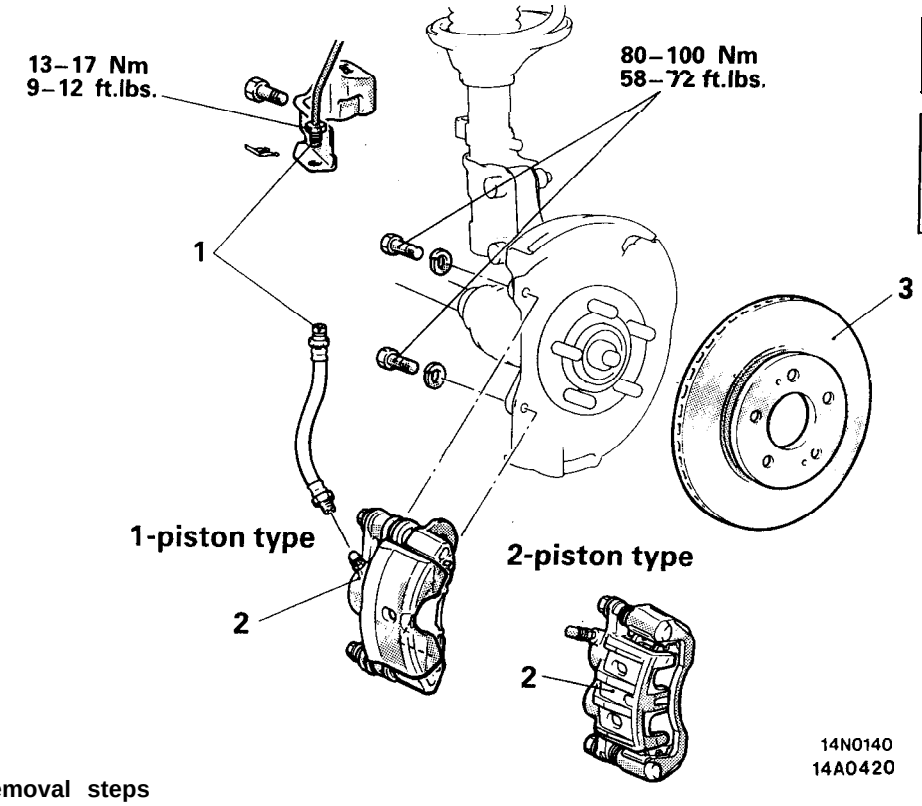

Pre-removal Operation
- Draining of Brake Fluid

Post-installation Operation
- Supplying Brake Fluid
- Bleeding
  (Refer to P.5-50.)

Removal steps

◆◆ ● 1. Connection for the brake hose and the brake tube
● + 2. Front brake assembly
3. Brake disc

NOTE
(1) Reverse the removal procedures to reinstall.
(2) ◆◆: Refer to "Service Points of Removal".
(3) ● +: Refer to "Service Points of Installation".

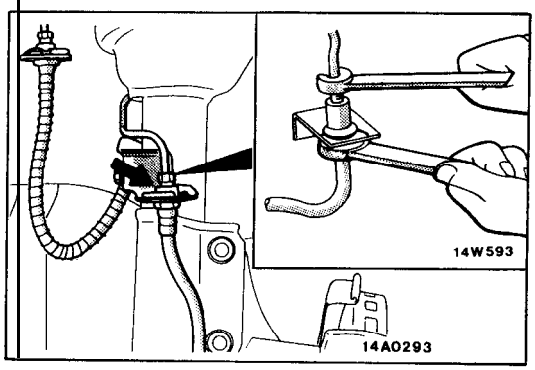

SERVICE POINTS OF REMOVAL

N05LBAF

1. DISCONNECTION OF BRAKE HOSE

Holding the nut on the brake hose side. Loosen the flared brake line nut.

INSPECTION

N05LCAD

INSPECTION OF BRAKE DISC

- Check disc for wear. (Refer to P.5-55, Thickness Check.)
- Check disc for runout. (Refer to P.5-54, Run-out Check.)
- Check disc for damage.

SERVICE POINTS OF INSTALLATION N05LDAG

2. INSTALLATION OF FRONT BRAKE ASSEMBLY

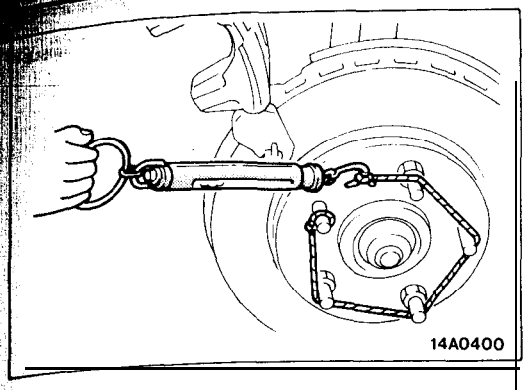

Measure the disc brake drag force after installation of the brake assembly by the following procedure.

(1) With the brake assembly removed, use a spring balance to measure the rotation sliding resistance of the hub in the forward direction.

NOTE
Tighten the nuts in order to secure the disc to the hub.

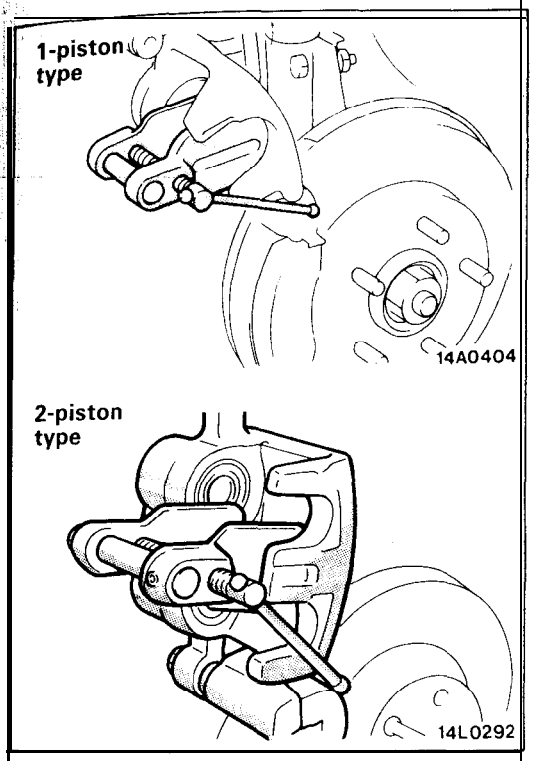

(2) After installing the caliper support to the knuckle, expand the piston, and then install the caliper body.

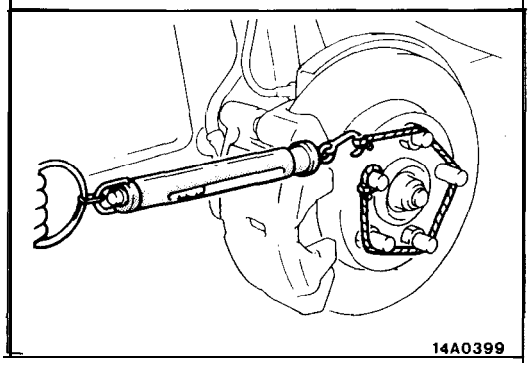

(3) Start the engine, and after depressing the brake pedal hard two or three times, stop the engine.
(4) Turn brake disc forward 10 times.
(5) Use a spring balance to measure the rotation sliding resistance of the hub in the forward direction.
(6) Calculate the drag torque of the disc brake (difference between measured values in 5 and 1).

Standard value: 70 N (15.4 lbs.) or less

(7) If the disc brake drag force exceeds the standard value, disassemble piston and'clean the piston. Check for corrosion or worn piston seal.

DISASSEMBLY AND REASSEMBLY

N05LE-

< 1 -piston type>

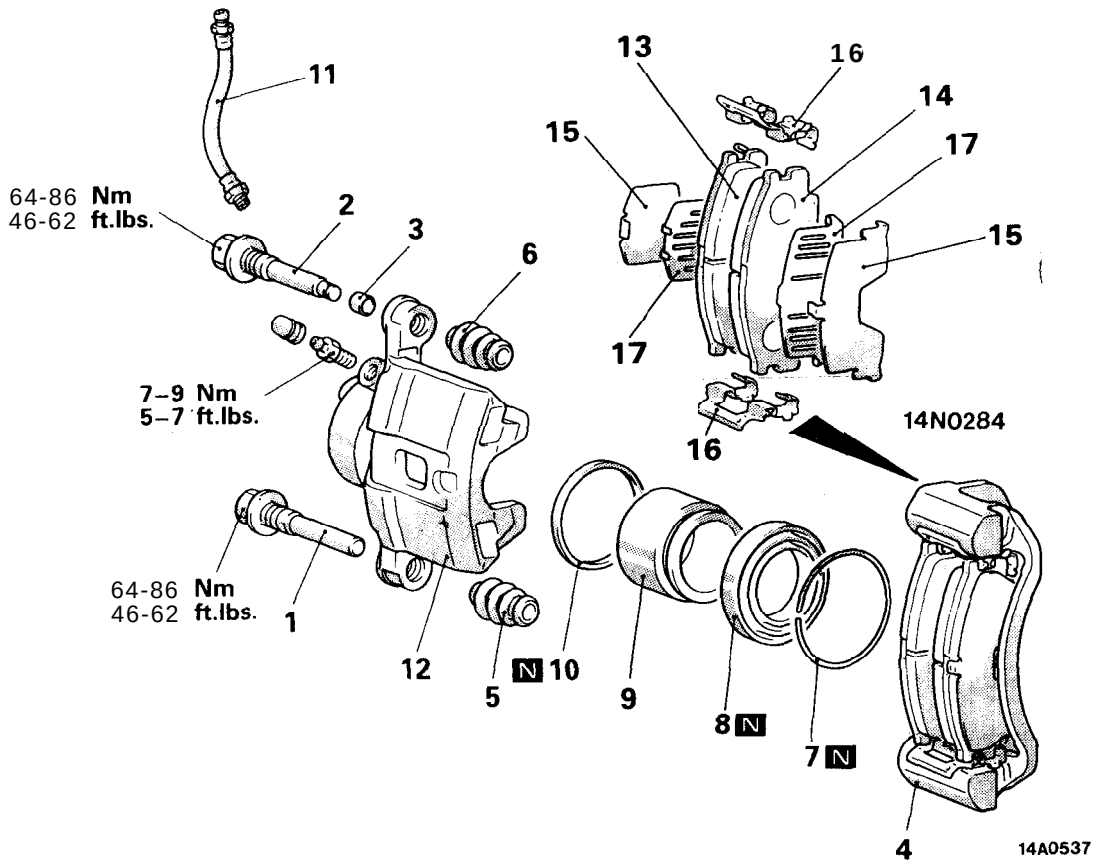

Caliper assembly disassembly steps

- ◆◆ 1. Guide pin
- ● + 2. Lock pin
- ● + 3. Bushing
- 4. Caliper support (Pad, clip, shim)
- ● + 5. Guide pin boot
- ◆◆ 6. Lock pin boot
- ◆◆ 7. Boot ring
- ◆◆ 8. Piston boot
- ● *** 9. Piston
- ◆◆ ● * 10. Piston seal
- 11. Brake hose
- ● + 12. Caliper body

Pad assembly disassembly steps

- ◆◆ 1. Guide pin
- ● + 2. Lock pin
- ◆◆ 3. Bushing
- 4. Caliper support (Pad, clip, shim)
- 13. Pad and wear indicator assembly
- 14. Pad assembly
- ◆◆ 15. Outer shim
- 16. Clip
- ◆◆ 17. Inner shim

NOTE
(1) Reverse the disassembly procedures to reassemble.
(2) ◆◆: Refer to "Service Points of Disassembly".
(3) ● +: Refer to "Service Points of Reassembly".
(4) N: Non-reusable parts

Brake caliper kit

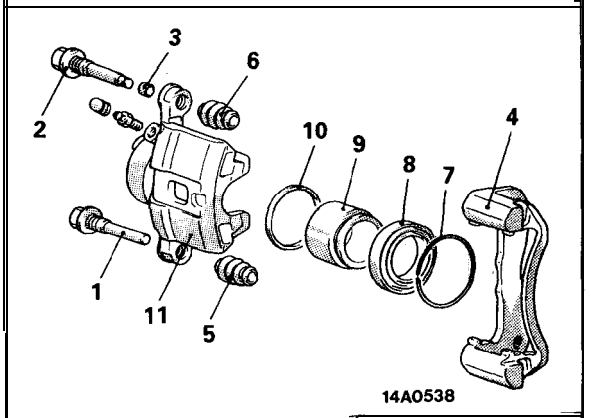

Pad repair kit

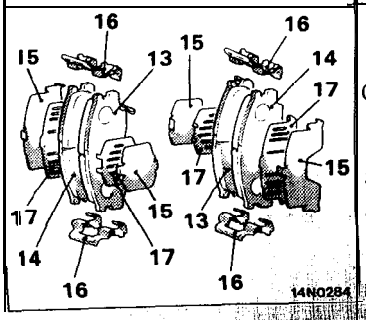

Seal and boots repair kit

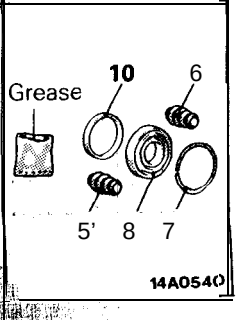

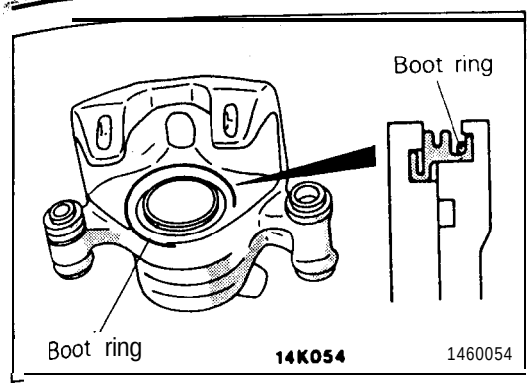

SERVICE POINTS OF DISASSEMBLY N05LFAJ

When disassembling the front disc brakes, disassemble both sides (left and right) as a set.

7. REMOVAL OF BOOT RING

Remove boot ring with flat tip (–) screwdriver.

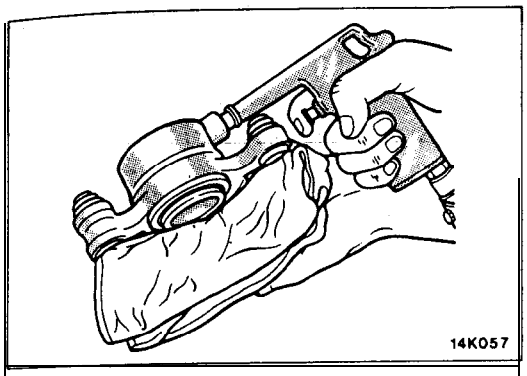

8. REMOVAL OF PISTON BOOT/9. PISTON

Protect caliper body with cloth. Blow compressed air through brake hose to remove piston boot and piston.

Caution
Blow compressed air gently.

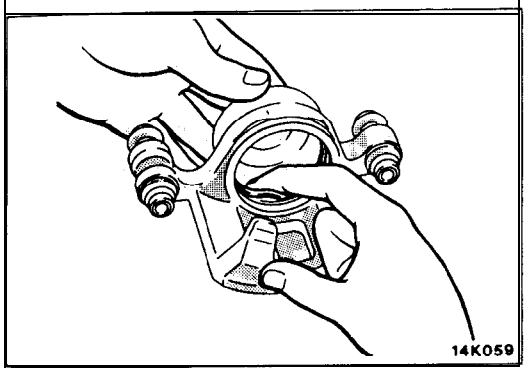

10. REMOVAL OF PISTON SEAL

(1) Remove piston seal with finger tip.

Caution
Do not use flat tip (–) screwdriver or other tool to prevent damage to inner cylinder.

(2) Clean piston surface and inner cylinder with trichloroethylene, alcohol or specified brake fluid.

Specified brake fluid: MOPAR Brake Fluid/ Conforming to DOT3 or DOT4

INSPECTION N05LGAJ

- Check cylinder for wear, damage or rust.
- Check piston surface for wear, damage or rust.
- Check caliper body guide pin or lock pin for wear.
- Check pad for damage or adhesion of grease, check backing metal for damage.

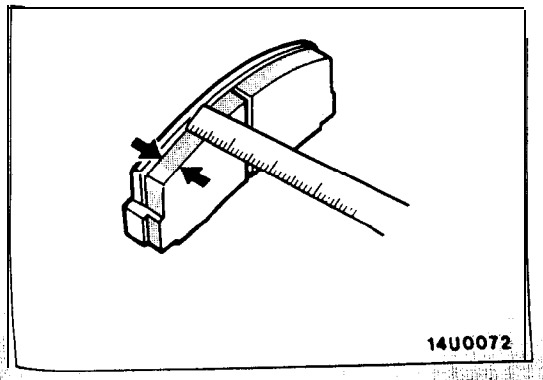

PAD WEAR CHECK

Measure thickness at the thinnest and worn area of the pad. Replace pad assembly when pad thickness is less than the limit value.

Limit value: 2.0 mm (.08 in.)

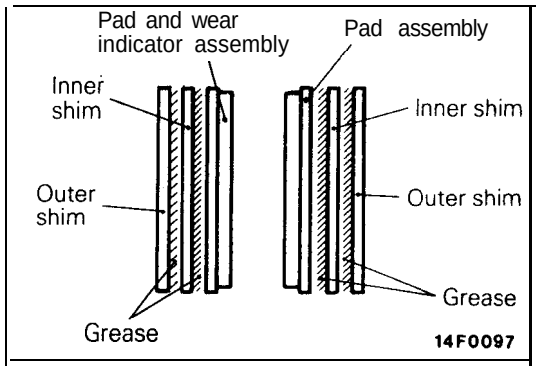

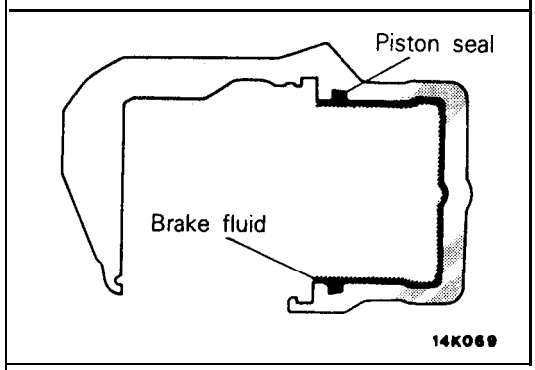

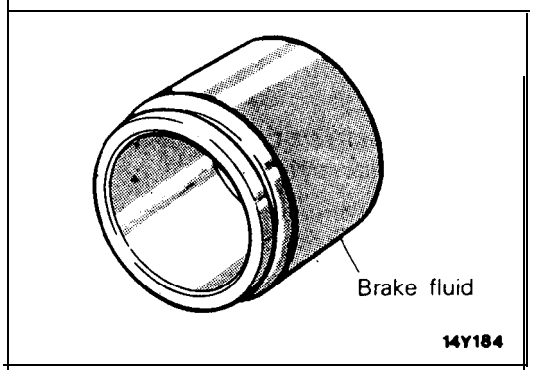

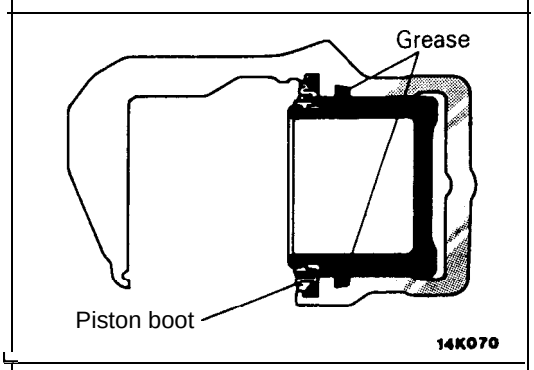

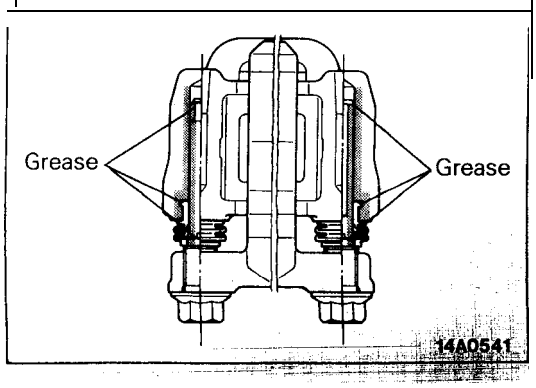

SERVICE POINTS OF REASSEMBLY

N05LHA

17. INSTALLATION OF INNER SHIM/15. OUTER SHIM

Coat the mounting surfaces of the pad and inner shim and the mounting surface of the inner shim and outer shim with repair kit grease, and assemble them.
Coat grease with care to prevent swelling.

Specified grease: Repair kit grease (orange)

Caution
Prevent oily materials and other dirt from sticking to the friction surfaces of the pad and brake disc.

12. APPLICATION OF BRAKE FLUID TO CALIPER BODY

Apply specified brake fluid to inner cylinder.

Specified brake fluid: MOPAR Brake Fluid/ Conforming to DOT3 or DOT4

10. INSTALLATION OF PISTON SEAL

Install piston seal in cylinder groove.

Caution
Do not wipe special grease on piston seal.

9. INSTALLATION OF PISTON

(1) Apply specified brake fluid to piston. Insert into cylinder without twisting.

Specified brake fluid: MOPAR Brake Fluid/ Conforming to DOT3 or DOT4

(2) Fill piston edge with specified grease. Install piston boots.

Specified grease: Repair kit grease (orange)

6. APPLICATION OF GREASE TO LOCK PIN BOOT/5. GUIDE PIN BOOT/3. BUSHING

Grease parts as illustrated with specified grease.

Specified grease: Repair kit grease (orange)

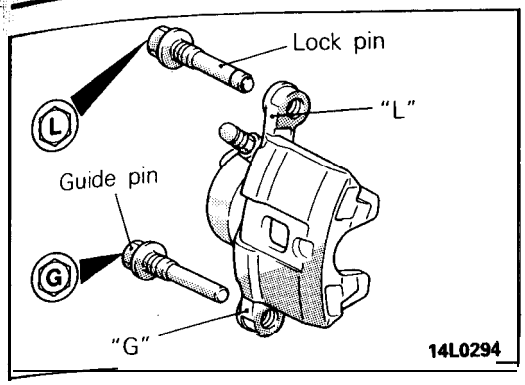

2. INSTALLATION OF LOCK PIN/ 1. GUIDE PIN

Install the guide pin and lock pin so the identification mark on the caliper body and head mark on the guide pin and lock pin are aligned.

DISASSEMBLY AND REASSEMBLY

N05LE-

<2-piston type>

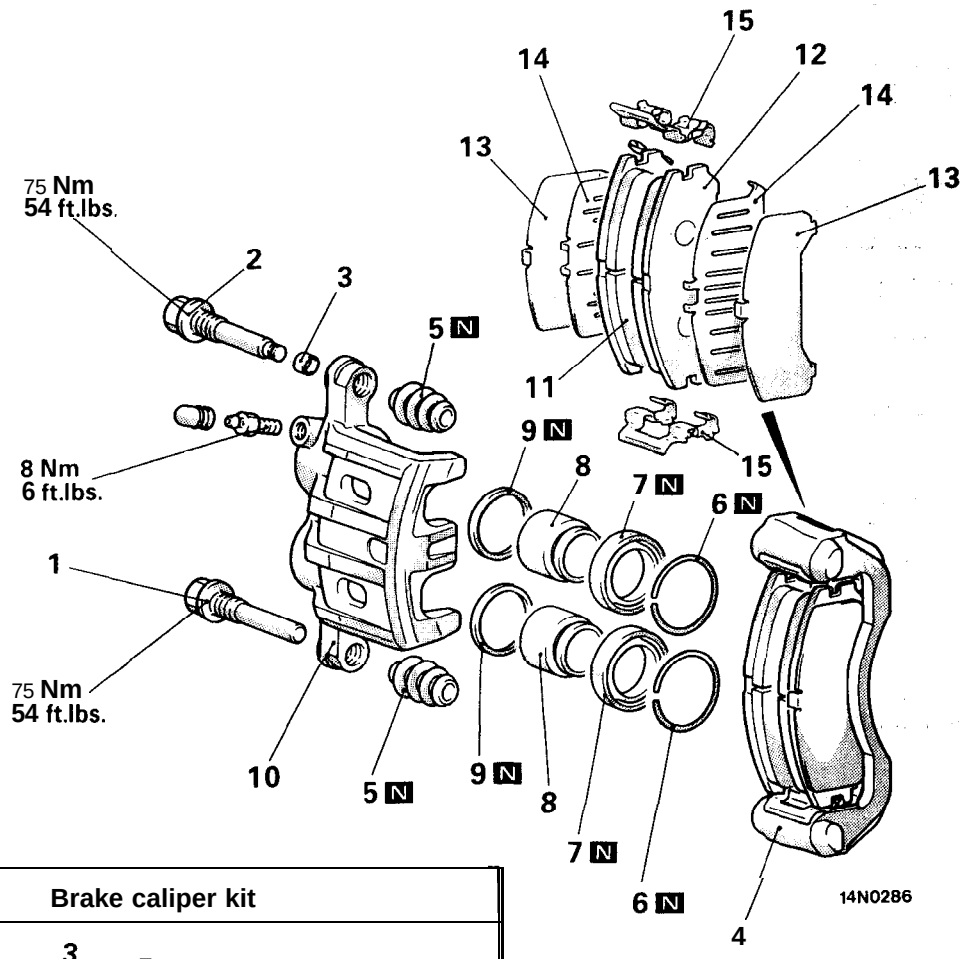

Brake caliper kit

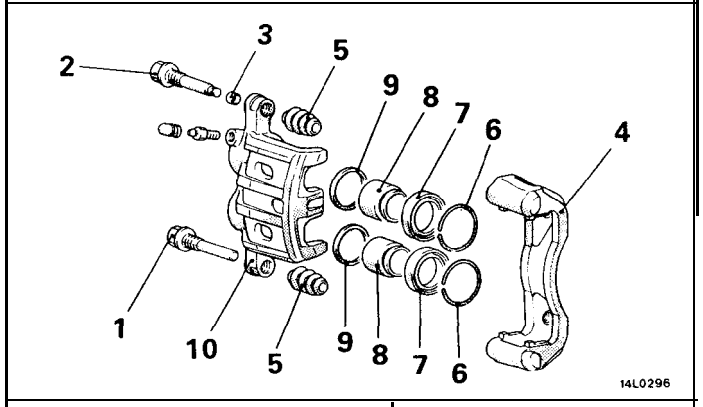

Pad repair kit

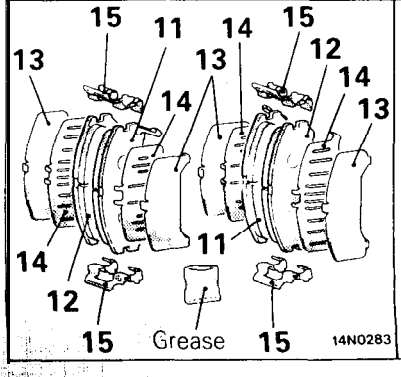

Seal and boots repair kit

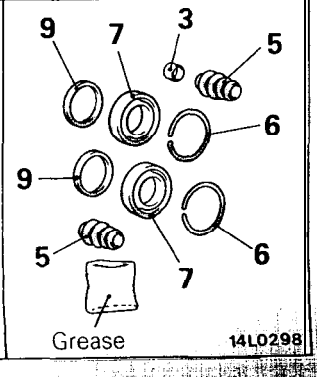

Caliper assembly disassembly steps

- ● + 1. Guide pin
- ◆◆ 2. Lock pin
- ● 3. Bushing
- 4. Caliper support (pad, clip, shim)
- ◆◆ 5. Boot
- 6. Boot ring
- ◆◆ 7. Piston boot
- ◆◆ ◆◆ 8. Piston
- ◆◆ ● + 9. Piston seal
- ● +I 0. Caliper body

Pad assembly disassembly steps

- ◆◆ 1. Guide pin
- ● + 2. Lock pin
- ◆◆ 3. Bushing
- 4. Caliper support (pad, clip, shim)
- 11. Pad assembly (with wear indicator)
- 12. Pad assembly
- ● +13. Outer shim
- ● 414. Inner shim
- 15. Clip

NOTE
(1) Reverse the disassembly procedures to reassemble.
(2) d*: Refer to "Service Points of Disassembly".
(3) ● 4: Refer to "Service Points of Reassembly".
(4) N : Non-reusable parts

N05LE

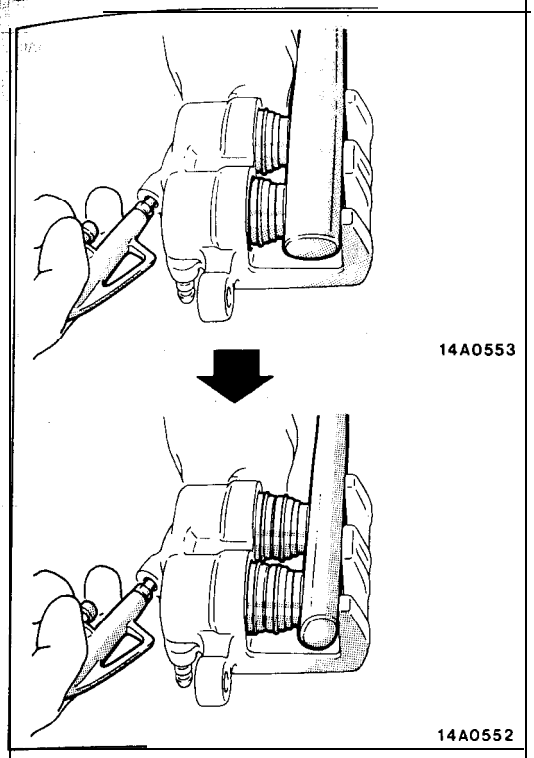

SERVICE POINTS OF DISASSEMBLY N05LFCB

When disassembling the rear disc brakes, disassemble both sides (left and right) as a set.

7. REMOVAL OF PISTON BOOT/8. PISTON

Pump in compressed air through the brake hose installation hole and remove the pistons and piston boot.

Caution

When removing the pistons, be sure to use the handle of a plastic hammer and adjust the height of the two pistons while pumping in air slowly in so that the pistons protrude evenly.

Do not remove one piston completely before trying to remove the other piston because it will become impossible to remove the second piston.

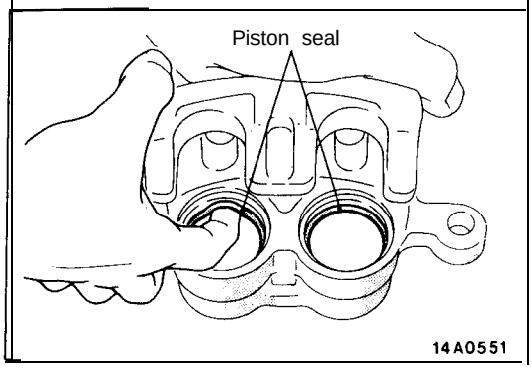

9. REMOVAL OF PISTON SEAL

(1) Remove piston seal with finger tip.

Caution

Do not use a screwdriver or other tool to prevent damage to inner cylinder.

(2) Clean piston surface and inner cylinder with trichloroethylene, alcohol or specified brake fluid.

Specified brake fluid: DOT3 or DOT4

INSPECTION N05LGCB

- Check cylinder for wear, damage or rust.
- Check piston surface for wear, damage or rust.
- Check caliper body or sleeve for wear.
- Check pad for damage or adhesion of grease, check backing metal for damage.
- Check wear indicator for damage.

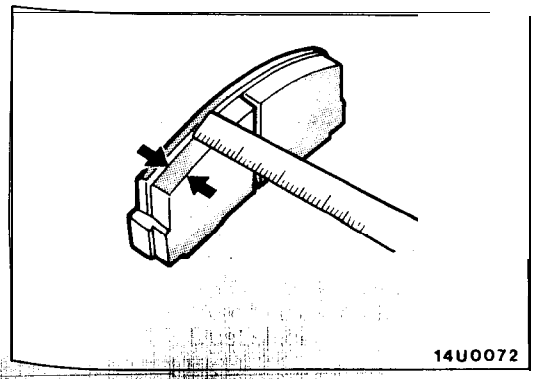

PAD WEAR CHECK

Measure thickness at the thinnest and worn area of the pad. Replace pad assembly when pad thickness is less than the limit value.

Standard value: 10 mm (.39 in.)
Limit: 2.0 mm (.08 in.)

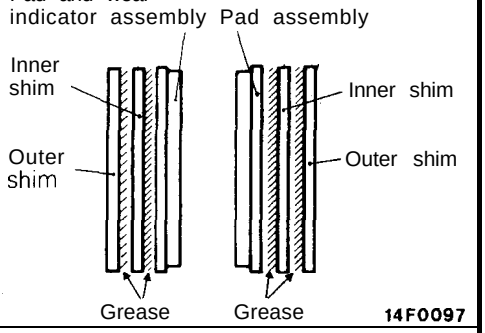

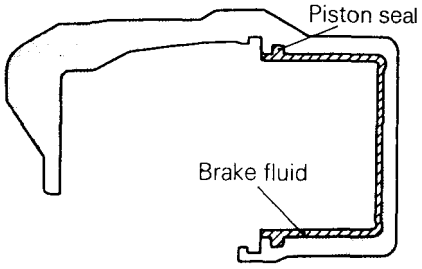

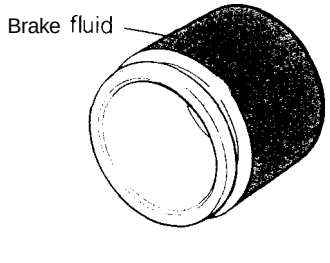

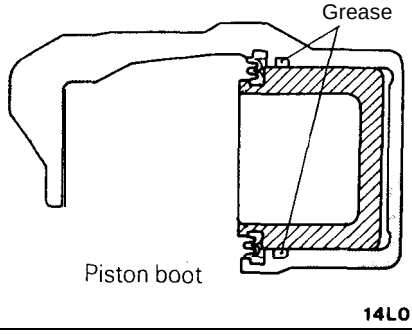

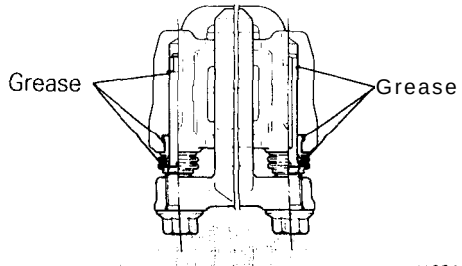

SERVICE POINTS OF REASSEMBLY

N05LR

7. INSTALLATION OF INNER SHIM/13. OUTER SHIM

Coat the mounting surfaces of the pad and inner shim and the mounting surface of the inner shim and outer shim with repair kit grease, and assemble them.
Coat grease with care to prevent swelling.

Specified grease: Repair kit grease (orange)

Caution
Prevent oily materials and other dirt from sticking to the friction surfaces of the pad and brake disc.

12. APPLICATION OF BRAKE FLUID TO CALIPER BODY

Apply specified brake fluid to inner cylinder.

Specified brake fluid: MOPAR Brake Fluid/ Conforming to DOT3 or DOT4

10. INSTALLATION OF PISTON SEAL

Install piston seal in cylinder groove.

Caution
Do not wipe special grease on piston seal.

9. INSTALLATION OF PISTON

(1) Apply specified brake fluid to piston. Insert into cylinder without twisting.

Specified brake fluid: MOPAR Brake Fluid/ Conforming to DOT3 or DOT4

(2) Fill piston edge with specified grease. Install piston boots.

Specified grease: Repair kit grease (orange)

6. APPLICATION OF GREASE TO BOOT/3. BUSHING-'

Grease parts as illustrated with specified grease.

Specified grease: Repair kit grease (orange)

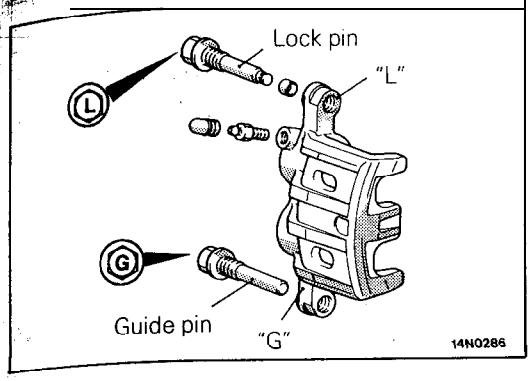

2. INSTALLATION OF LOCK PIN/I. GUIDE PIN

Install the guide pin and lock pin so the identification mark on the caliper body and head mark on the guide pin and lock pin are aligned.

REAR DISC BRAKE

N05MA--

REMOVAL AND INSTALLATION

Pre-removal Operation
- Draining of Brake Fluid

Post-installation Operation
*Supplying Brake Fluid
- Bleeding
(Refer to P.5-50.)
*Adjustment of Parking Brake Lever Stroke
(Refer to P.5-48.)

<FWD>

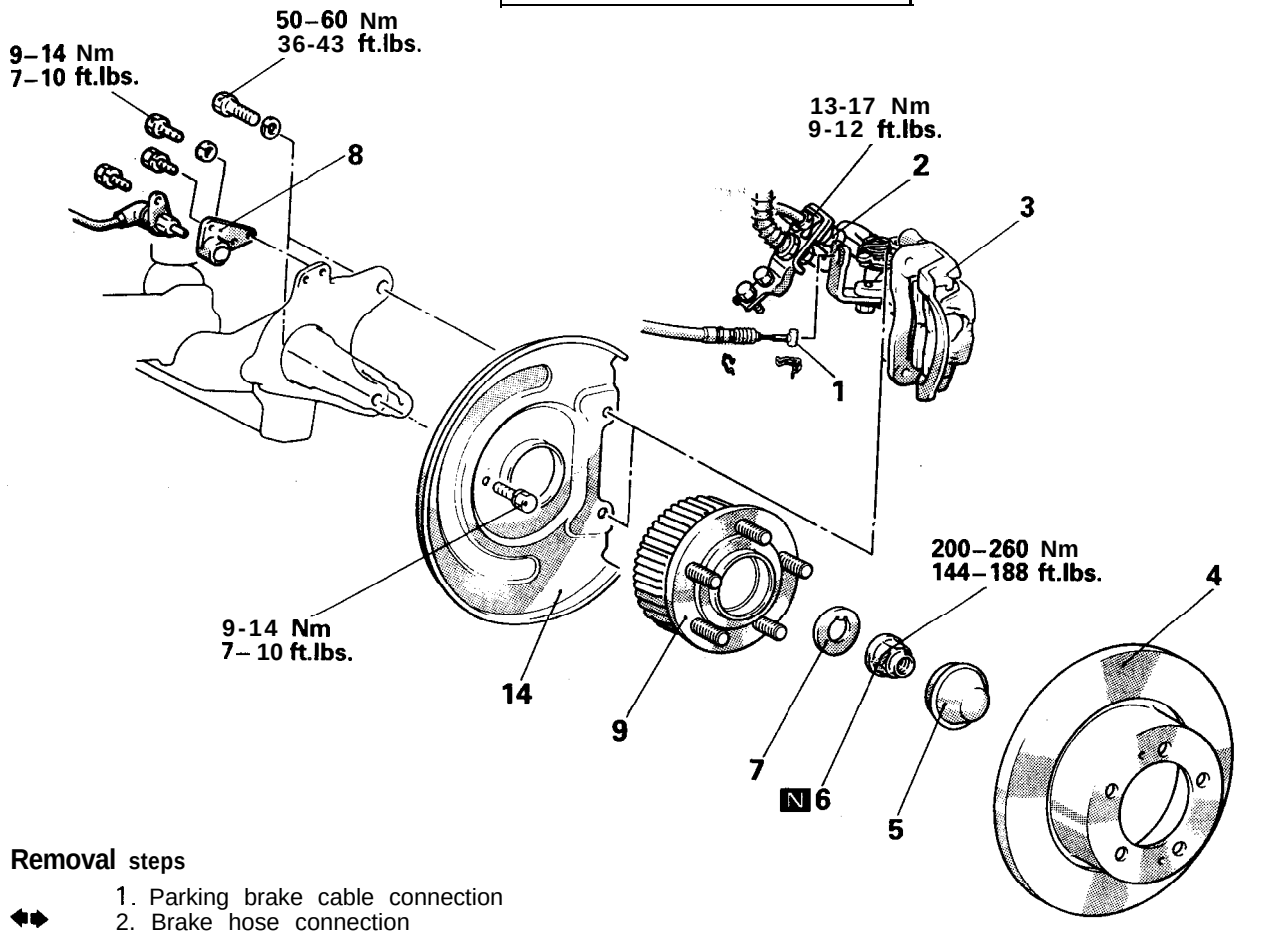

Removal steps

1. Parking brake cable connection
◆◆ 2. Brake hose connection
3. Rear brake assembly
4. Rear brake disc
5. Hubcap
● 6. Wheel bearing nut
7. Washer
8. Rear speed sensor bracket <Vehicles with ABS>
9. Rear hub assembly
14. Dust shield

NOTE
(1) Reverse the removal procedures to reinstall.
(2) ◆◆: Refer to "Service Points of Removal".
(3) ● +: Refer to "Service Points of Installation"
(4) N: Non-reusable parts

<AWD>

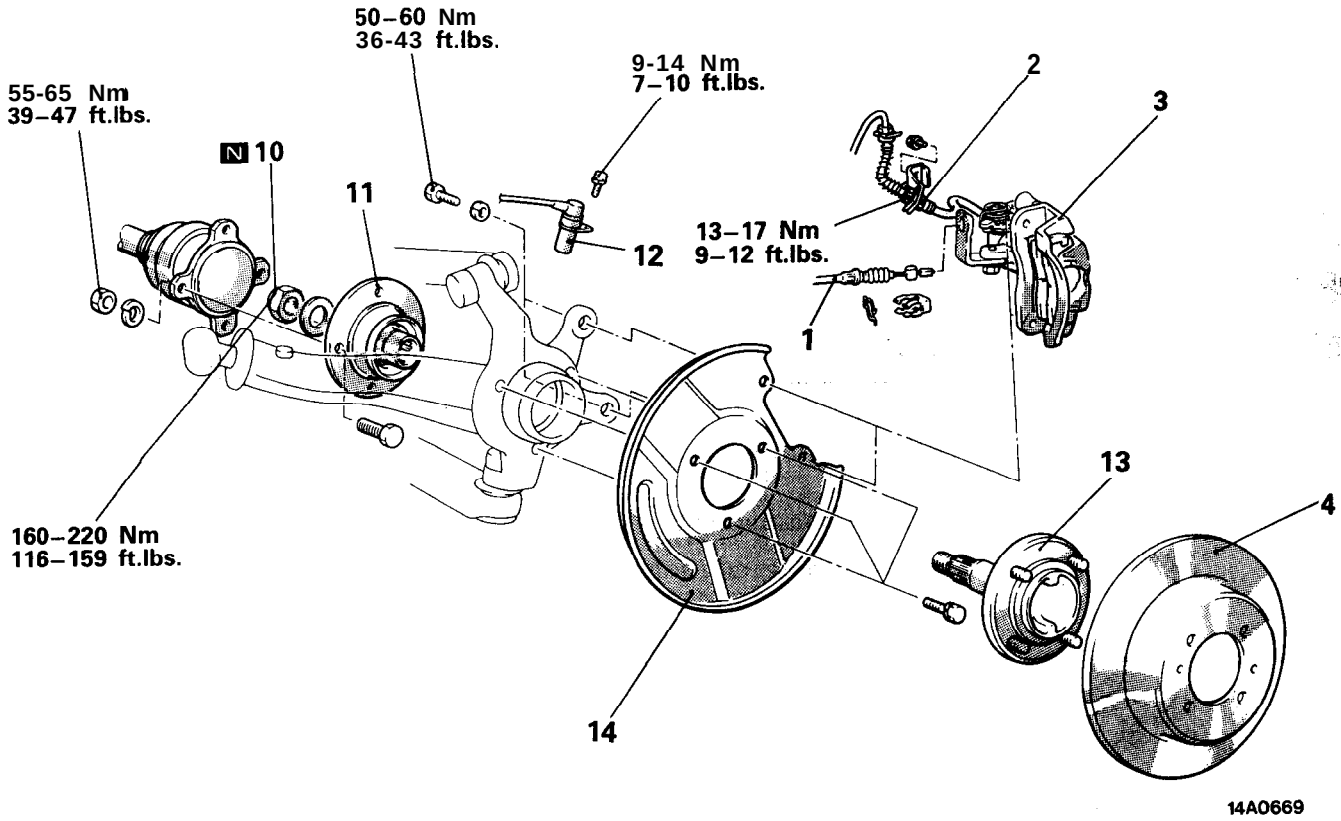

Removal steps

1. Parking brake cable connection
◆◆ 2. Brake hose connection
3. Rear brake assembly
4. Rear brake disc
◆◆ ● *10. Self locking nut
● *11. Companion flange
12. Rear speed sensor <Vehicles with ABS>
◆◆ ◆◆ 13. Rear axle shaft
14. Dust shield

Pre-removal Operation *Draining of Brake Fluid
Post-installation Operation ●Supplying Brake Fluid ●Bleeding (Refer to P.5-50.) ● Adjustment of Parking Brake Lever Stroke (Refer to P.5-48.)

NOTE
(1) Reverse the removal procedures to reinstall.
(2) ◆◆: Refer to "Service Points of Removal".
(3) ◆◆: Refer to "Service Points of Installation".
(4) ❑ : Non-reusable parts

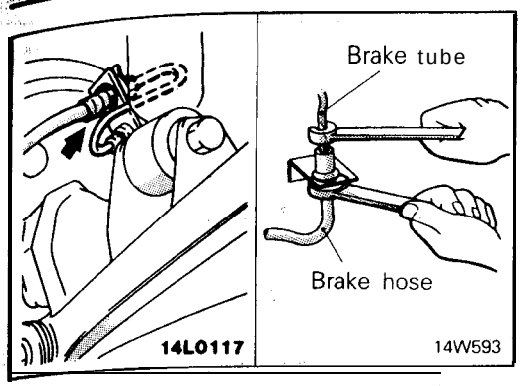

SERVICE POINTS OF -REMOVAL N05MBAD

2. DISCONNECTION OF BRAKE HOSE

Holding the lock nut on the brake hose side, loosen the flared brake line nut.

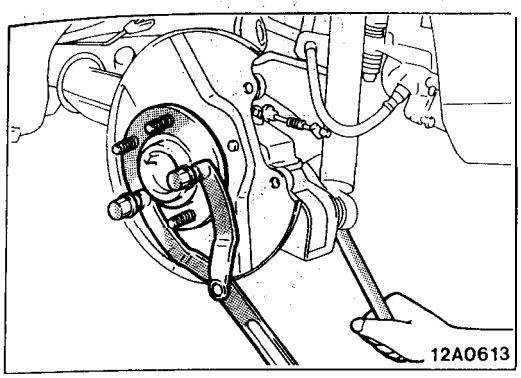

10. REMOVAL OF SELF LOCKING NUT

Using end yoke holder, secure and hold the rear axle shaft, and remove the self locking nut.

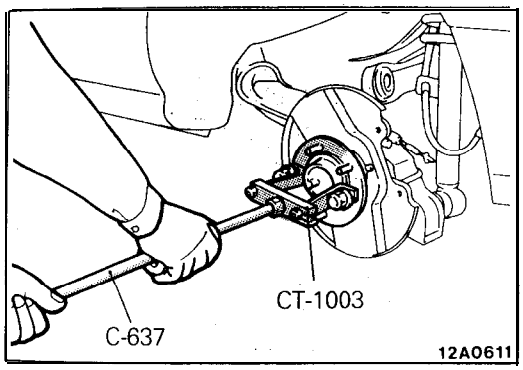

13. REMOVAL OF REAR AXLE SHAFT

Using the special tool, remove the rear axle shaft.

INSPECTION N05MDABa

- Check disc for wear. (Refer to P.5-56, Rear Brake Disc Thickness Check.)
- Check disc for runout. (Refer to P.5-57, Rear Brake Disc Run-out Check.)
- Check disc for damage.

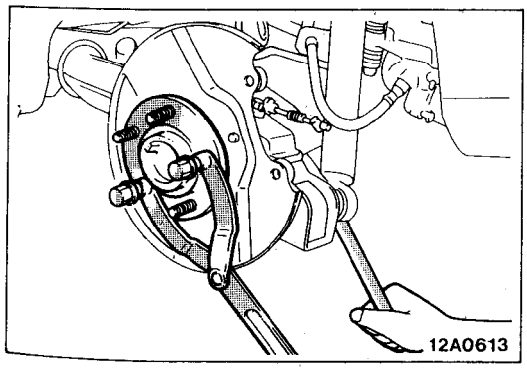

SERVICE POINTS OF INSTALLATION N05MCAF

13. INSTALLATION OF REAR AXLE SHAFT/11. COMPANION FLANGE/10. SELF LOCKING NUT

(1) Provisionally install the rear axle shaft to the trailing arm.
(2) Install the companion flange to the rear axle shaft, and install the self locking nut.
(3) Then, using end yoke holder, secure and hold the rear axle shaft, and tighten the self locking nut.

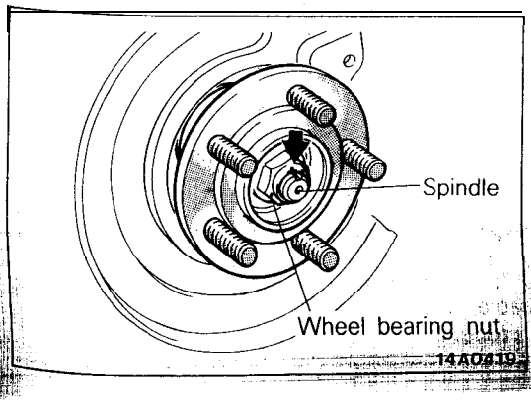

6. INSTALLATION OF WHEEL BEARING NUT

After tightening the wheel bearing nut, align with the indentation in the spindle, and then crimp.

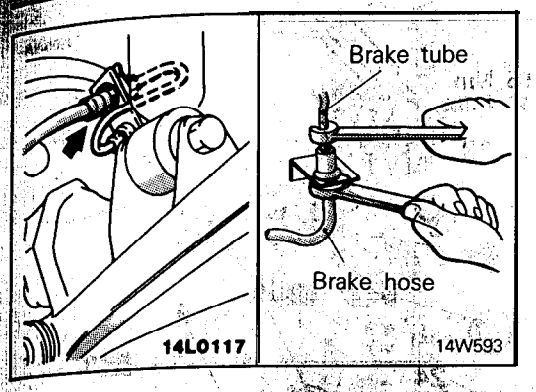

SERVICE POINTS OF REMOVAL N05MBAD

2. DISCONNECTION OF BRAKE HOSE

Holding the lock nut on the brake hose side, loosen the flared brake line nut.

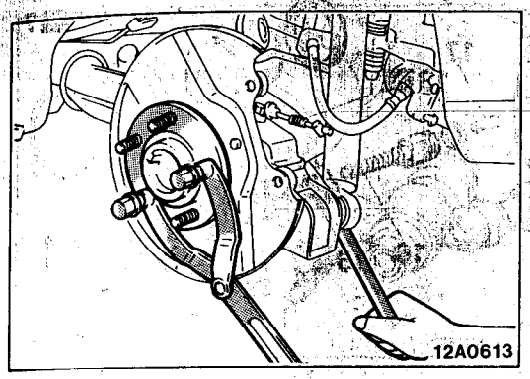

10. REMOVAL OF SELF LOCKING NUT

Using end yoke holder, secure and hold the rear axle shaft, and remove the self locking nut.

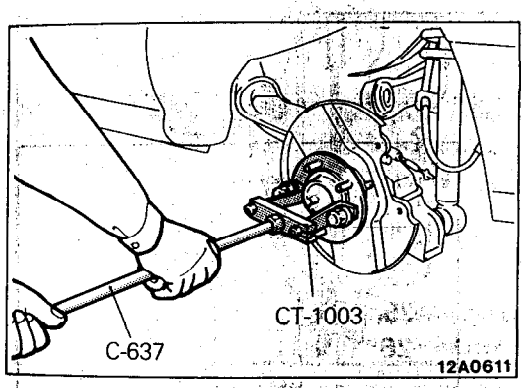

13. REMOVAL OF REAR AXLE SHAFT

Using the special tool; remove the rear axle shaft.

INSPECTION N05MDABa

- Check disc for wear. (Refer to P.5-56, Rear Brake Disc Thickness Check.)
- Check disc for runout. (Refer to P.5-57, Rear Brake Disc Run-out Check.)
- Check disc for damage.

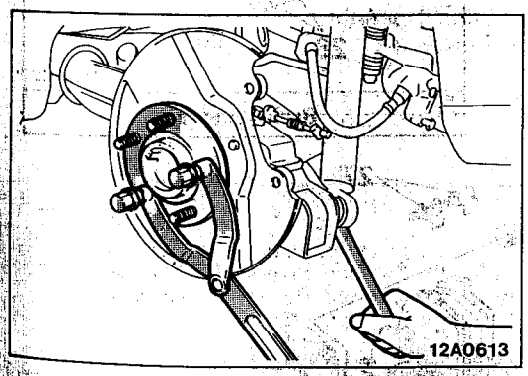

SERVICE POINTS OF INSTALLATION N05MCAF

13. INSTALLATION OF REAR AXLE SHAFT/11. COMPANION FLANGE/10. SELF LOCKING NUT

(1) Provisionally install the rear axle shaft to the trailing arm.
(2) Install the companion flange to the rear axle shaft, and install the self locking nut.
(3) Then, using end yoke holder, secure and hold the rear axle shaft, and tighten the self locking nut.

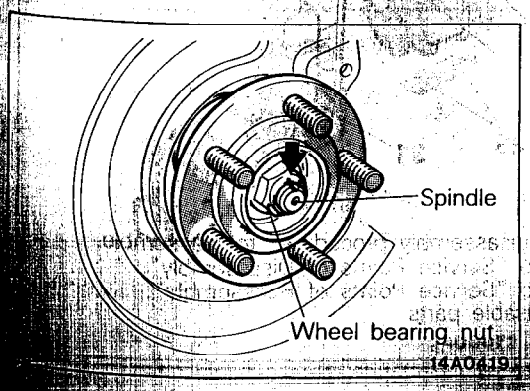

6. INSTALLATION OF WHEEL BEARING NUT

After tightening the wheel bearing nut, align with the indentation in the spindle, and then crimp.

WHEEL AND TIRE

N22GA--

REMOVAL AND INSTALLATION

Steel type

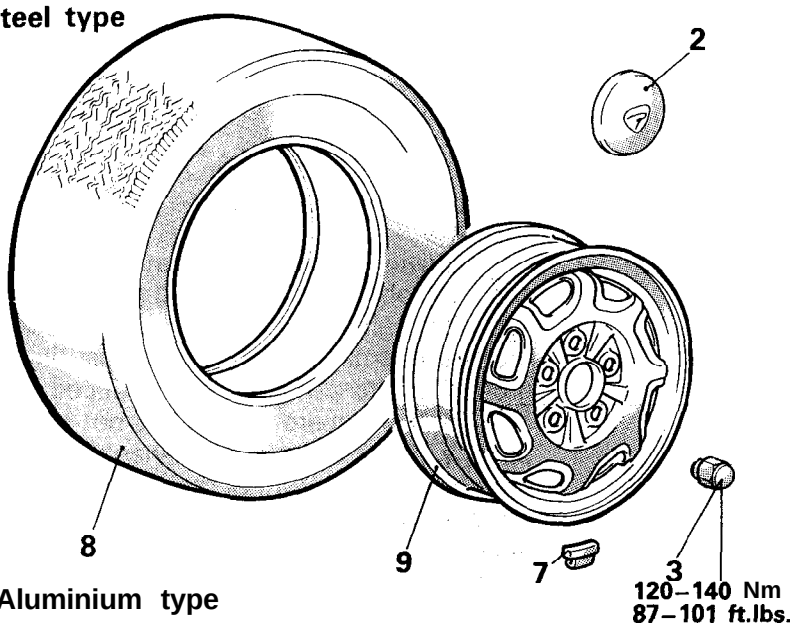

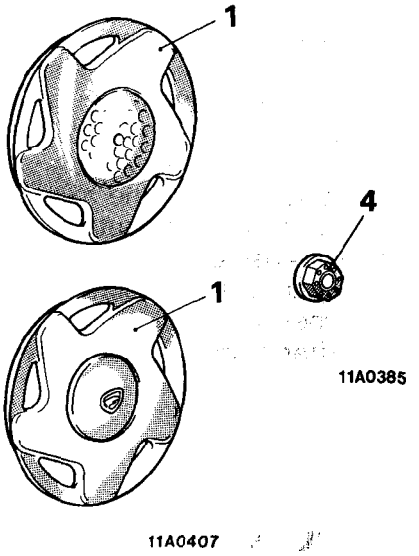

Aluminium type

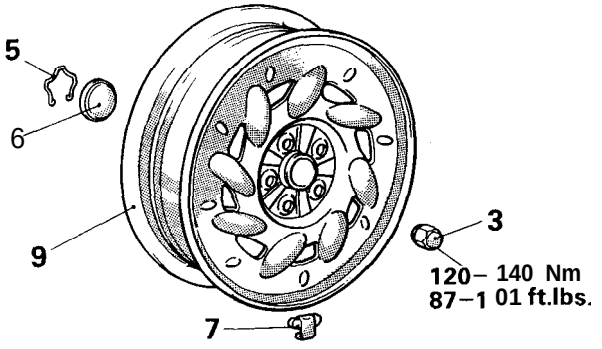

11A0405

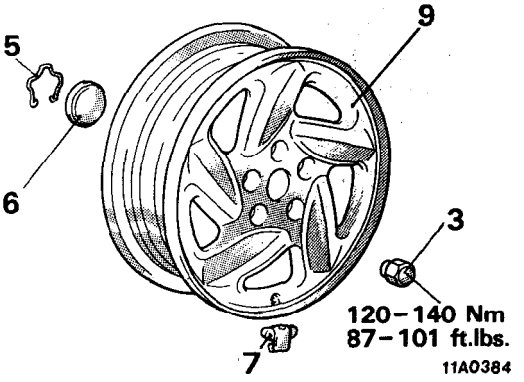

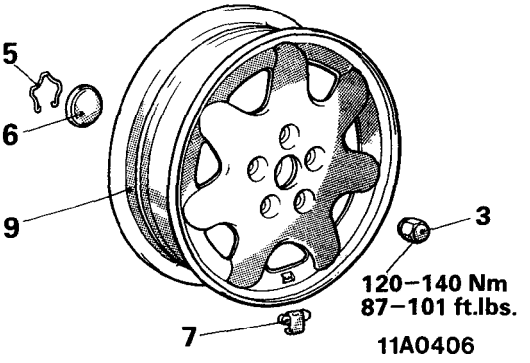

Removal steps

1. Wheel cover <Vehicles with wheel cover>
2. Center cover <Vehicles with center cover>
- ● + 3. Wheel nuts
4. Center cap <Vehicles with center cap>
5. Spring
6. Ornament
7. Balance weight
8. Tire
9. Wheel

NOTE
(1) Reverse the removal procedures to reinstall.
(2) ● 4 : Refer to "Service Points of Installation".

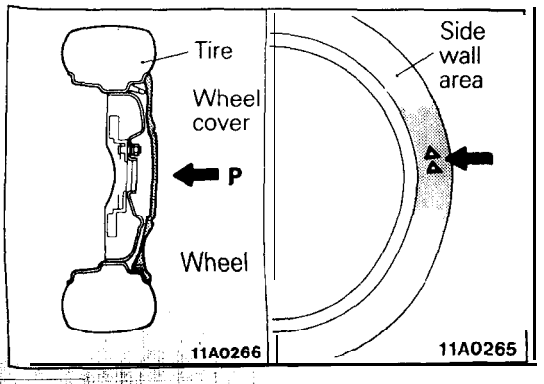

SERVICE POINT OF INSTALLATION

N22GDABa

3. INSTALLATION OF WHEEL NUTS

On the high speed tire (205/55R16 88V) vehicle, the left and right tires are respectively specified. Attach the tires as follows:

Observe the wheel in the P direction as illustrated, and the direction characters will be found.

Attach the (◁◁ ROTATION LEFT SIDE) tire on the left wheel, and the (ROTATION RIGHT SIDE DD) tire on the right wheel.,

INSTRUCTIONS FOR ALUMINUM TYPE WHEELS

N22GFAA

1. Aluminum is vulnerable to alkalies. If a vehicle washing detergent has been used, or salt from sea water or road chemicals has adhered, wash the vehicle as soon as possible. After washing the vehicle, apply body or wheel wax to the aluminum type wheels to prevent corrosion.
2. When cleaning the vehicle with steam, do not direct steam onto the aluminum type wheels. When tightening nuts for aluminum type wheels, particularly observe the following:
   (1) Clean the hub surface of aluminum type wheels.
   (2) After finger-tightening wheel nuts, tighten them to specifications.
   (3) Do not use an impact wrench or push the wrench by foot to tighten the wheel nuts.
   (4) Do not apply oil to the threaded portions.

INSTRUCTIONS FOR TIRE CHAINS AND SNOW TIRES

N22GGAA

1. Use tire chains only on front wheels. Do not use tire chains on rear wheels.
2. When using snow tires, use them on all four wheels for maneuverability and safety.

INSTRUCTIONS FOR COMPACT SPARE TIRE

N22GHAA

1. The compact spare tire is designed to save space in the luggage compartment, and its lighter weight makes it easier to use if a flat tire occurs.
2. The following instructions for the compact spare tire should be observed.
   (1) Check the inflation pressure after installing the spare, and adjust to the specified pressure.
   (2) Avoid driving through automatic car washes and over obstacles that could possibly damage the vehicle's undercarriage. Because the tire is smaller than the original tire, car ground clearance is slightly reduced,
   (3) The compact spare tire should not be used on any other wheels, nor should standard tires, snow tires, wheel covers or trim rings be used with the compact spare wheel. If such use is attempted, damage to these items or other vehicle components may occur.

BODY

CONTENTS

N23AA--

AERO PARTS 72
CENTRAL DOOR LOCKING SYSTEM 68
DOOR ASSEMBLY 61
DOOR GLASS AND REGULATOR 64
DOOR HANDLE AND LATCH 67
DOOR MIRROR.. 70
DOOR MOULDING AND DRIP LINE WEATHERSTRIP 70
DOOR RUNCHANNEL 69
DOOR TRIM AND WATERPROOF FILM.. 63
ELECTRIC REMOTE CONTROLLED MIRROR SWITCH.. 71
FENDER.. 49
FLOOR CONSOLE 84
FRONT BUMPER 37
FRONT SEAT 90
FUEL TANK FILLER DOOR 36
GARNISHES 45
HEADLINING 89
HOOD.. 33
INSTRUMENT PANEL., ... 79
LIFTGATE 35
LIFTGATE WINDOW GLASS 60
LOOSE PANEL 51
MOULDING 46
POWER WINDOW.. 65
QUARTER WINDOW GLASS.. 59
REAR BUMPER 41
REAR SEAT 93
SEAT BELT 94
SERVICE ADJUSTMENT PROCEDURES.. 30
- Door Adjustment 31
- Door Glass Adjustment 31
- Door Inside Handle Play Check 31
- Door Outside Handle Play Check 31
- Floor Pan Inspection 32
- Fuel Filler Door Adjustment 30
- Hood Adjustment 30
- Liftgate Adjustment 30
- Water Test 32

SPECIAL TOOLS 5
SPECIFICATIONS 2
- General Specifications 2
- Lubricants 5
- Sealants and Adhesives 5
- Service Specifications 3
- Torque Specifications 3

SUNROOF 77
TRIMS 85
TROUBLESHOOTING 6
WINDOW GLASS.. 52
WINDSHIELD.. 56

HOOD

N23HAASa

REMOVAL AND INSTALLATION

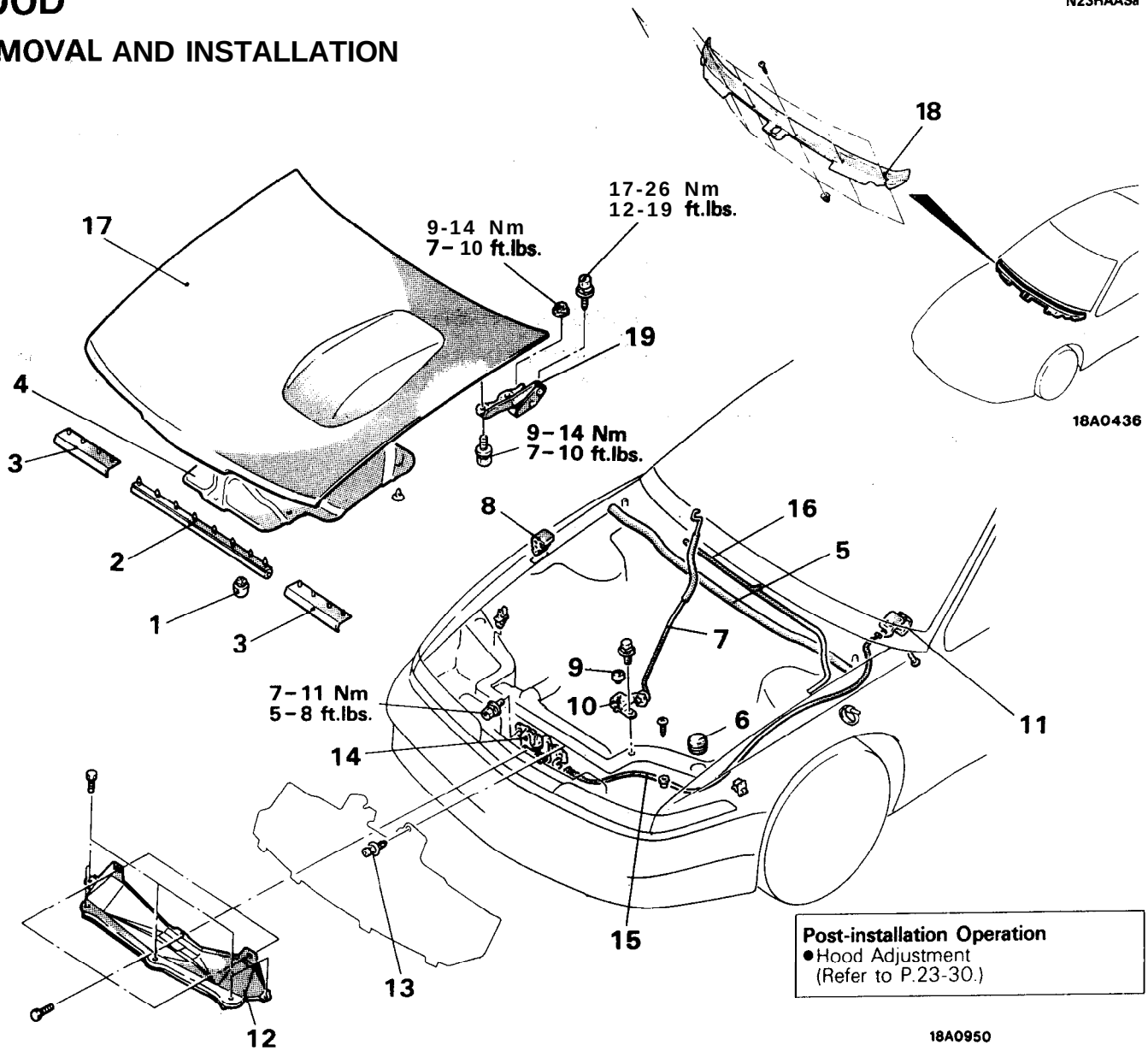

Post-installation Operation
- Hood Adjustment (Refer to P.23-30.)

Removal

1. Bumper
2. Hood weatherstrip
3. Hood front weatherstrip
4. Heat protector
5. Hood weatherstrip
6. ● Bumper
7. Hood support rod
8. Bumper
9. Bumper
10. Bumper bracket
11. ● Hood lock release handle
12. Front fascia bracket
13. Clip
14. ● Hood latch

Hood lock release cable removal steps

11. ◆◆ Hood lock release handle
12. Front fascia bracket
13. Clip
14. ◆◆ Hood latch
15. Hood lock release cable

Hood removal steps

16. Connection for washer tube and nozzle
17. Hood

Hood hinge removal steps

16. Connection for washer tube and nozzle
17. Hood
    Windshield wiper arms (Refer to GROUP 51 – Windshield Wiper.)
18. Front deck garnish
19. ◆◆ Hood hinge

NOTE
(1) Reverse the removal procedures to reinstall.
(2) ● : Refer to "Service Points of Installation".

SERVICE POINTS OF INSTALLATION

19. APPLICATION OF GREASE TO HOOD HINGE/14 HOOD LATCH/I 1. HOOD LOCK RELEASE HANDLE

Apply multipurpose grease to all moving parts.

Grease: MOPAR Multipurpose Grease Part No 2932524 or equivalent

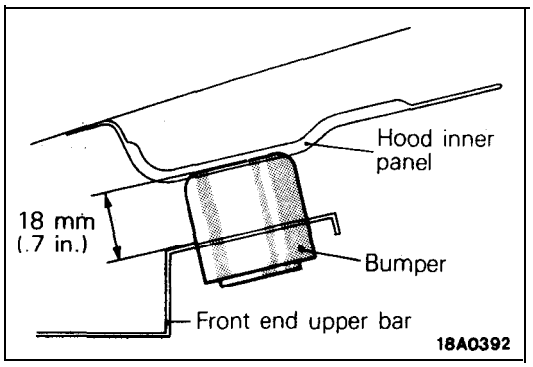

6. INSTALLATION OF BUMPER

Install the bumper so that the amount of projection from the front end upper bar is as shown in the illustration.

LIFTGATE

N23OAAT

REMOVAL AND INSTALLATION

Post-installation Operation
- Liftgate Adjustment (Refer to P.23-30.)

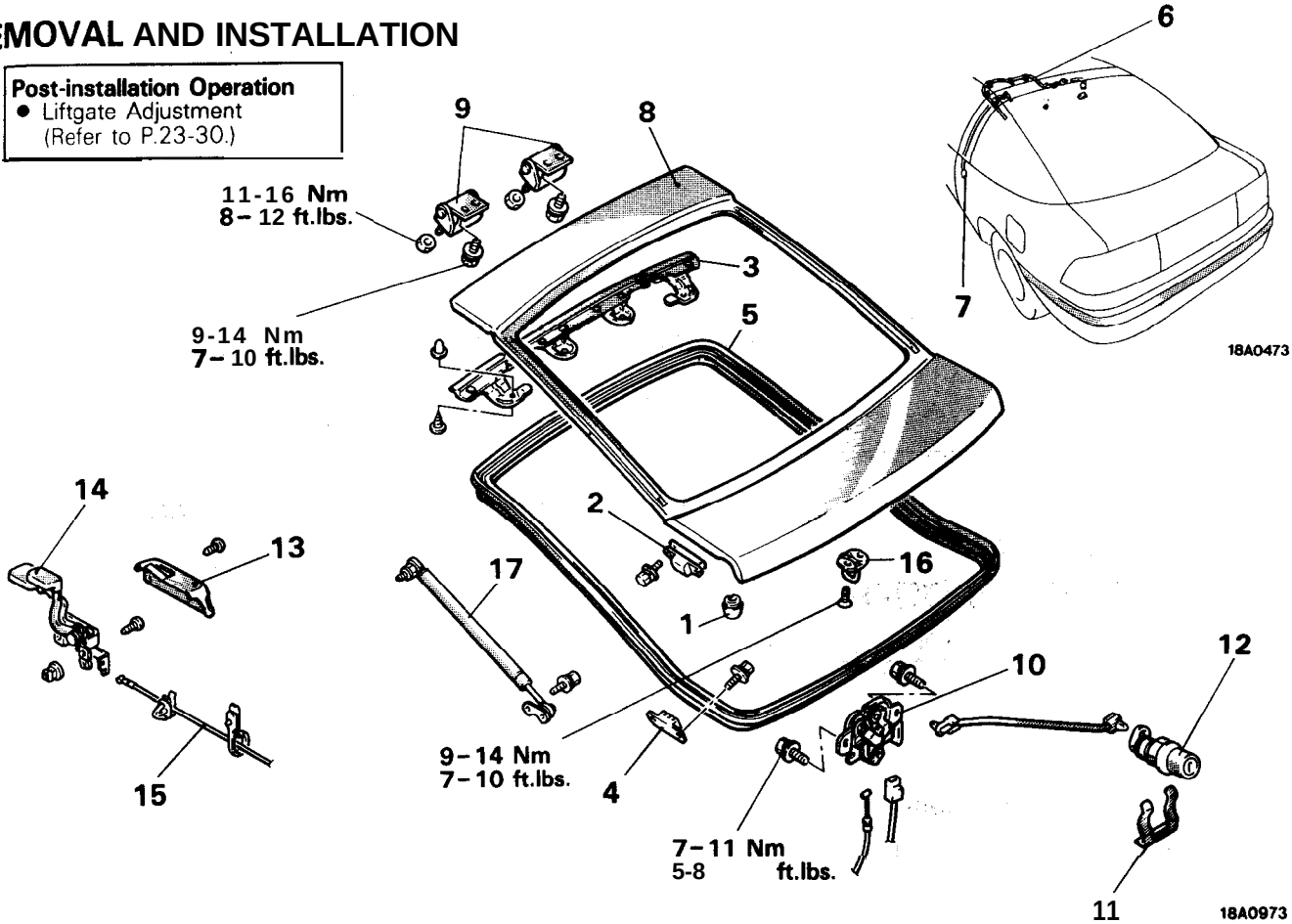

Removal

1. Bumper
2. Liftgate damper (upper)
3. Liftgate outer weatherstrip
4. Liftgate damper (lower)
5. Liftgate opening weatherstrip

Liftgate hinge removal steps

Headlining (Refer to P.23-89.)
6. Connection for rear washer tube
   Center pillar trim (driver's side) } (Refer to
   Quarter trim (driver's side) } P.23-85.)
7. Connection for liftgate wiring harness
8. Liftgate
9. Liftgate hinge

Liftgate removal steps

6. Connection for rear washer tube
   Center pillar trim (driver's side) } (Refer to
   Quarter trim (driver's side) } P.23-85.)
7. Connection for liftgate wiring harness
8. Liftgate

Liftgate lock release cable removal steps

Rear seat (Refer to P.23-93.)
Scuff plate (driver's side)
Quarter trim (driver's side) } (Refer to
Rear end trim } P.23-85.)
Rear side trim

● 10. Liftgate latch
13. Release handle cover
◆◆ 14. Liftgate lock release handle
15. Liftgate lock release cable

Liftgate lock release handle removal steps

Scuff plate (driver's side) (Refer to P.23-85.)
13 Release handle cover
● * 14. Liftgate lock release handle

Liftgate latch removal steps

Rear end trim (Refer to P.23-85.)
● *10. Liftgate latch

Liftgate lock cylinder removal steps

Rear end trim (Refer to P.23-85.)
1 1 Retainer
12. Liftgate lock cylinder

Liftgate striker removal steps

Liftgate trim (Refer to P.23-86.)
16 Liftgate striker

Liftgate stopper removal steps

Rear side trim (Refer to P.23-85.)
◆◆ 17. Liftgate stopper

NOTE
(1) Reverse the removal procedures to reinstall.
(2) ◆◆ : Refer to "Service Points of Removal".
(3) ◆◆ : Refer to "Service Points of Installation".

SERVICE POINTS OF REMOVAL

17. REMOVAL OF LIFTGATE STOPPER

Caution

1. **Never try to disassemble the liftgate gas spring or bum it.**
2. **Always bore a hole in the gas spring to release the interior gas before the spring is discarded.**

SERVICE POINTS OF INSTALLATION

14. APPLICATION OF GREASE TO LIFTGATE LOCK RELEASE HANDLE/ 10. LIFTGATE LATCH

Apply multipurpose grease to all moving parts

Grease: MOPAR Multipurpose Grease Part No. 2932524 or equivalent

FUEL TANK FILLER DOOR

N23JAAQ

REMOVAL AND INSTALLATION

Pre-removal Operation
- Removal of Rear Seat (Refer to P.23-93.)
- Removal of Rear Side Trim, Quarter Trim and Scuff Plate. (Refer to P.23-85.)

Post-installation Operation
- Installation of Rear Side Trim Quarter Trim and Scuff Plate (Refer to P.23-85.)
- Installation of Rear Seat (Refer to P.23-93.)
- Fuel Filler Door Adjustment (Refer to P.23-30.)

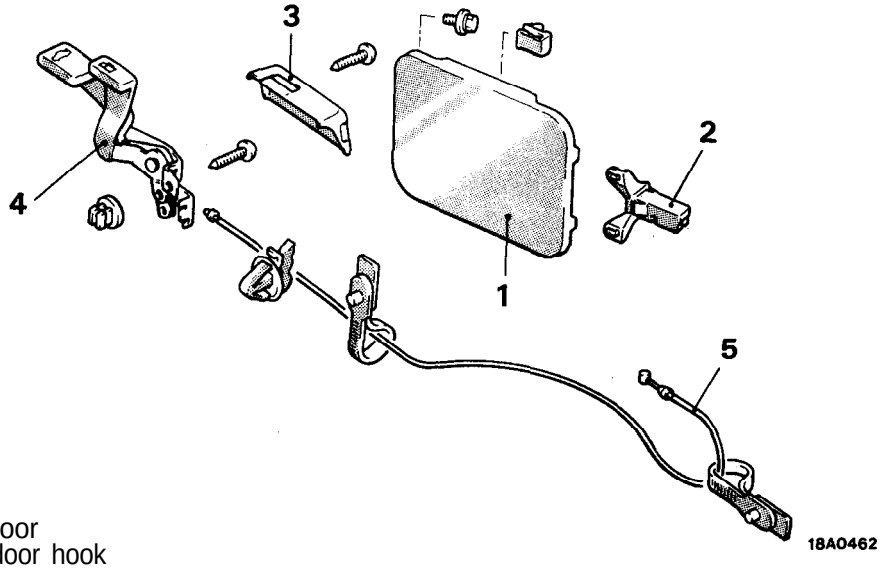

Removal steps

◆◆ 1. Fuel filler door
2. Fuel filler door hook
3. Release handle cover
● * 4. Fuel filler door lock release handle
5. Fuel filler door lock release cable

NOTE
(1) Reverse the removal procedures to reinstall.
(2) ◆◆: Refer to "Service Points of Installation".

SERVICE POINTS OF INSTALLATION

4. APPLICATION OF GREASE TO FUEL FILLER DOOR LOCK RELEASE HANDLE/1. FUEL FILLER DOOR

Apply multipurpose grease to all moving parts.

Grease: MOPAR Multipurpose Grease Part No. 2932524 or equivalent

FRONT BUMPER

N23ZAAY

REMOVAL AND INSTALLATION

<EAGLE Talon>

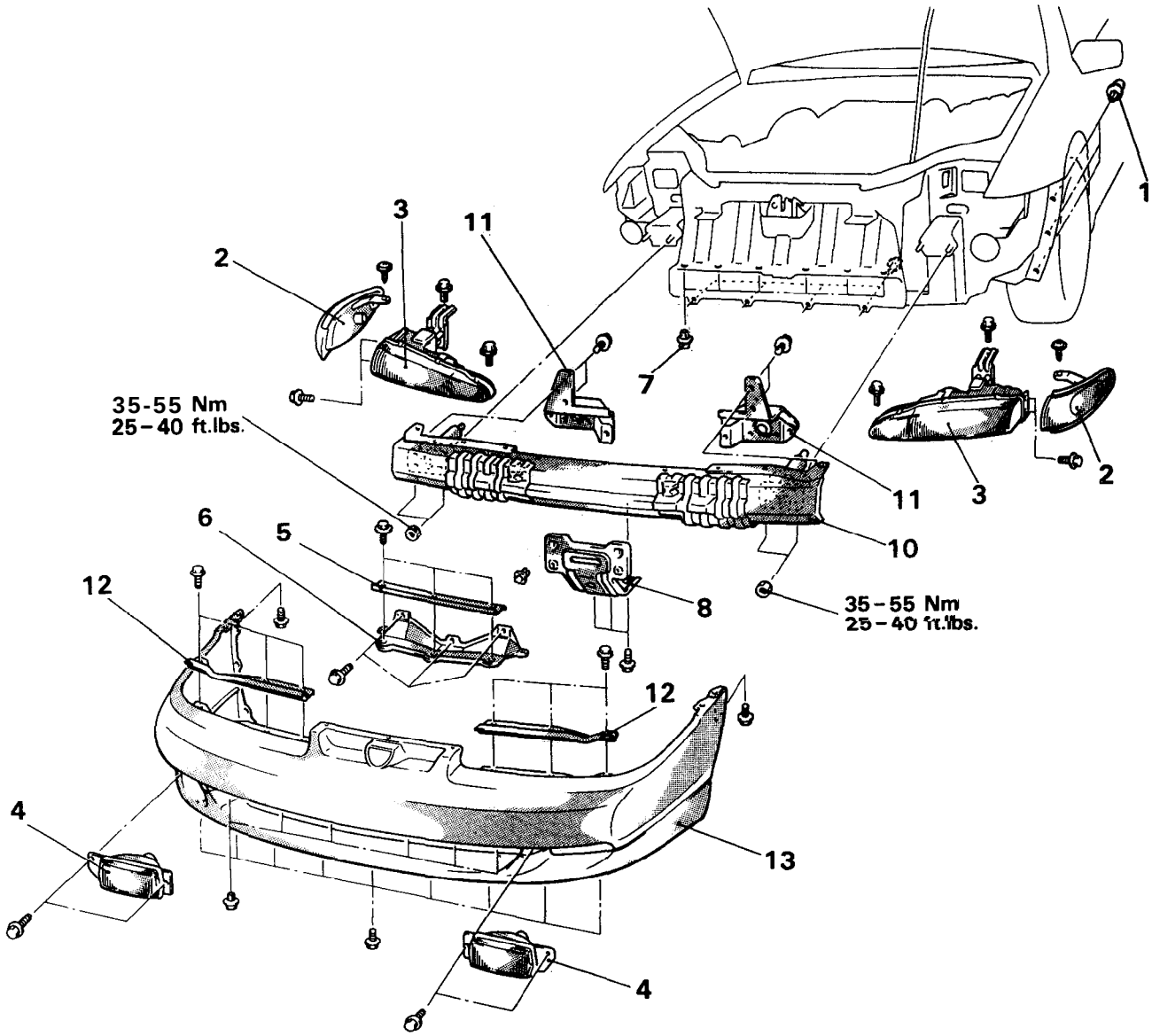

Front. bumper assembly removal steps

1. Splash shield mounting clip
2. Front combination light
3. Headlight
4. Fog light
5. Center upper plate
6. Front fascia bracket
7. Clip
8. License plate bracket
9. Front bumper assembly (No. 1 O-I 3)
10. Front bumper reinforcement
11. Fog light bracket
12. Side upper plate
13. Front bumper fascia

Front bumper fascia removal steps

1. Splash shield mounting clip
2. Front combination light
3. Headlight
4. Fog light
5. Center upper plate
6. Front fascia bracket
7. Clip
8. License plate bracket
12. Side upper plate
13. Front bumper fascia

NOTE
Reverse the removal procedures to reinstall.

<PLYMOUTH Laser>

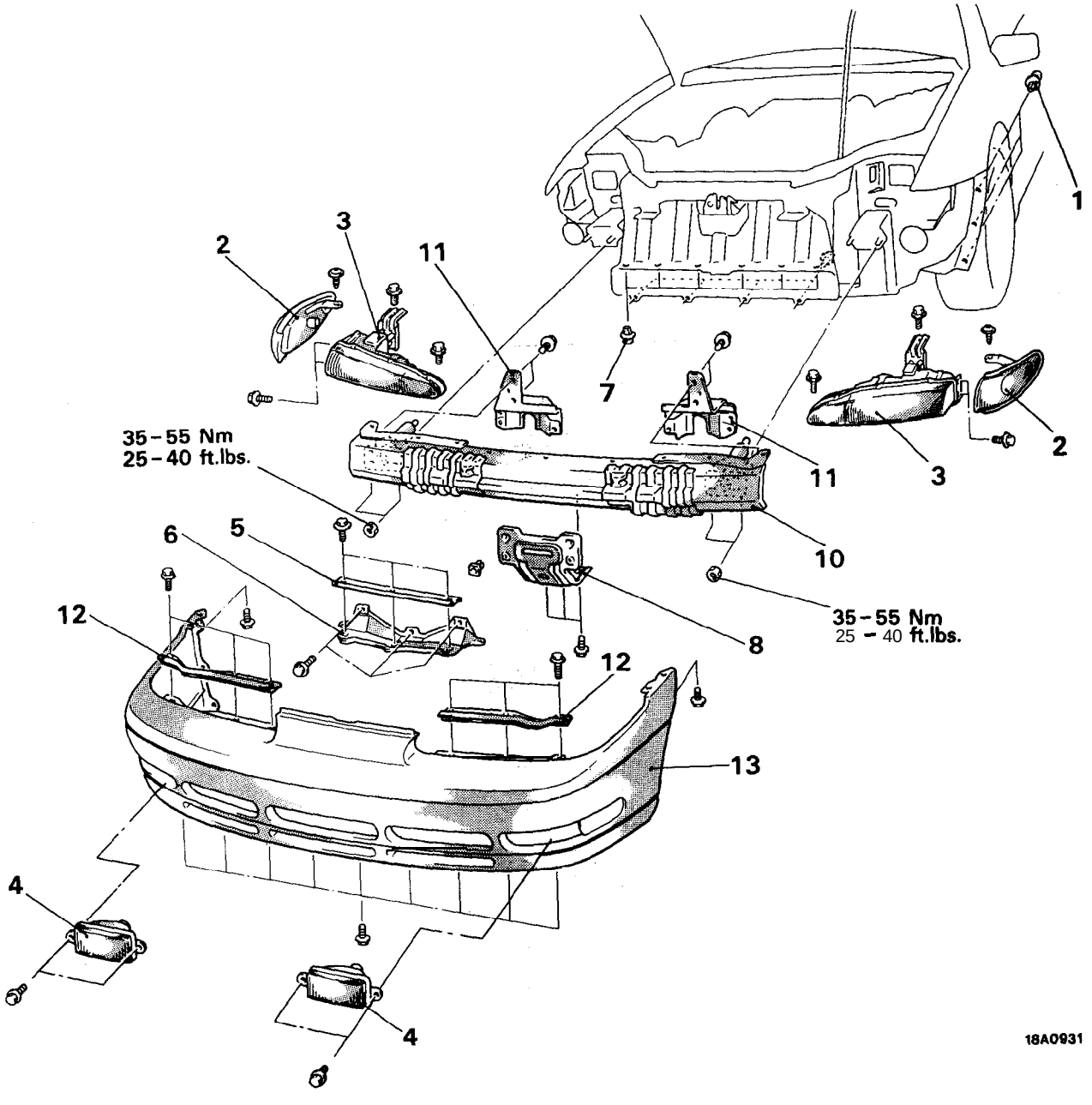

Front bumper assembly removal steps

1. Splash shield mounting clip
2. Front combination light
3. Headlight
4. Fog light
5. Center upper plate
6. Front fascia bracket
7. Clip
8. License plate bracket
9. Front bumper assembly (No. 1 O-I 3)
10. Front bumper reinforcement
11. Fog light bracket
12. Side upper plate
13. Front bumper fascia

Front bumper fascia removal steps

1. Splash shield mounting clip
2. Front combination light
3. Headlight
4. Fog light
5. Center upper plate
6. Front fascia bracket
7. Clip
8. License plate bracket
12. Side upper plate
13. Front bumper fascia

NOTE
Reverse the removal procedures to reinstall.

DISASSEMBLY AND REASSEMBLY

<EAGLE Talon>

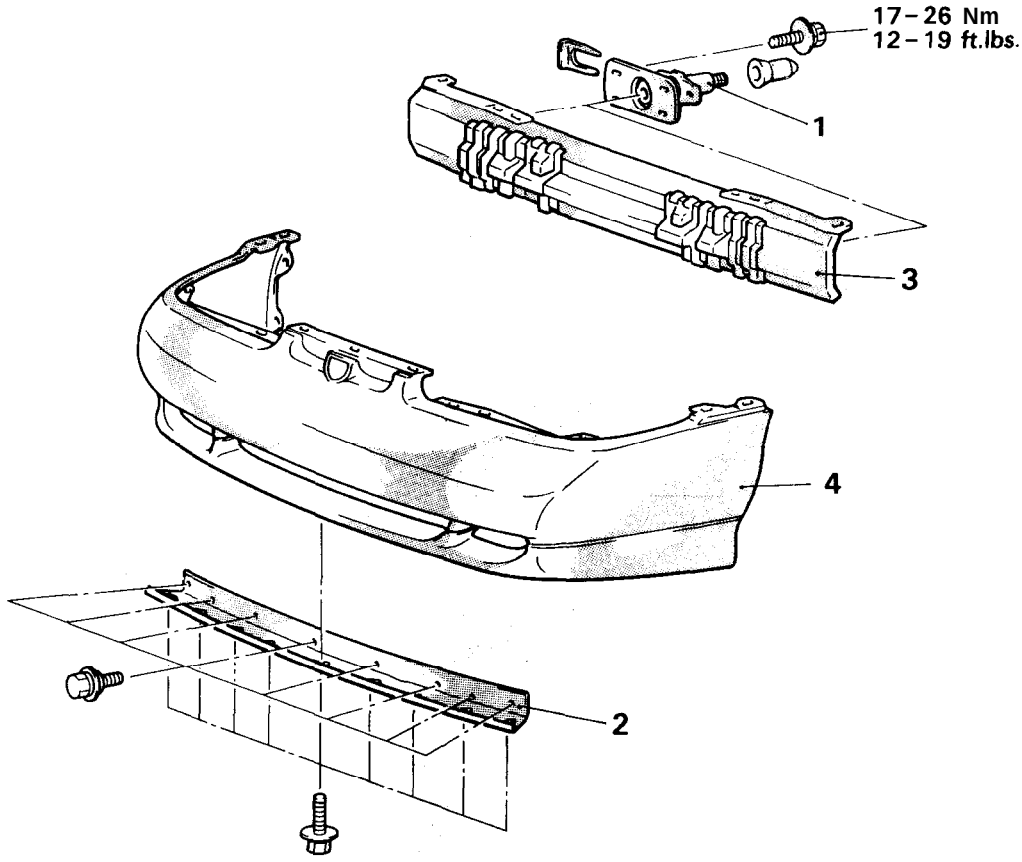

Disassembly steps

◆◆◆◆ 1. Bumper absorber
2. Lower plate
3. Front bumper reinforcement
4. Front bumper fascia

NOTE
(1) Reverse the disassembly procedures to reassemble.
(2) ◆◆: Refer to "Service Points of Disassembly"
(3) ● +: Refer to "Service Points of Reassembly"

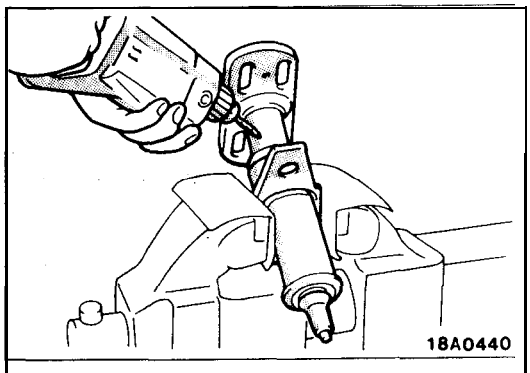

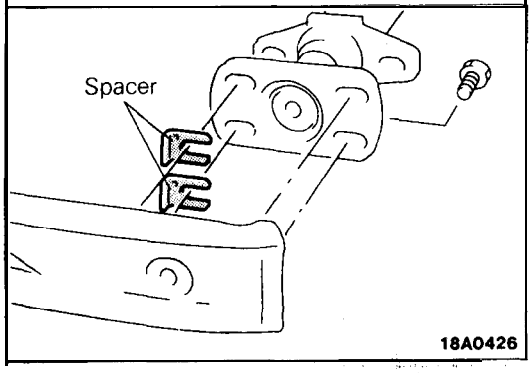

SERVICE POINTS OF DISASSEMBLY

1. REMOVAL OF BUMPER ABSORBER

Caution

1. **Do not attempt to repair a bumper absorber that has been compressed in an accident; replace it with a new one.**
2. **Before discarding the bumper absorber, drill a 3 mm (. 13 in.) diameter hole to discharge the gas contained in the unit.**
3. **If the bumper absorber is to be discarded, do not burn it.**

SERVICE POINTS OF REASSEMBLY

1. INSTALLATION OF BUMPER ABSORBER

If the squareness between the front bumper reinforcement and the bumper absorber is improper, adjust it by putting a spacer between them.

<PLYMOUTH Laser>

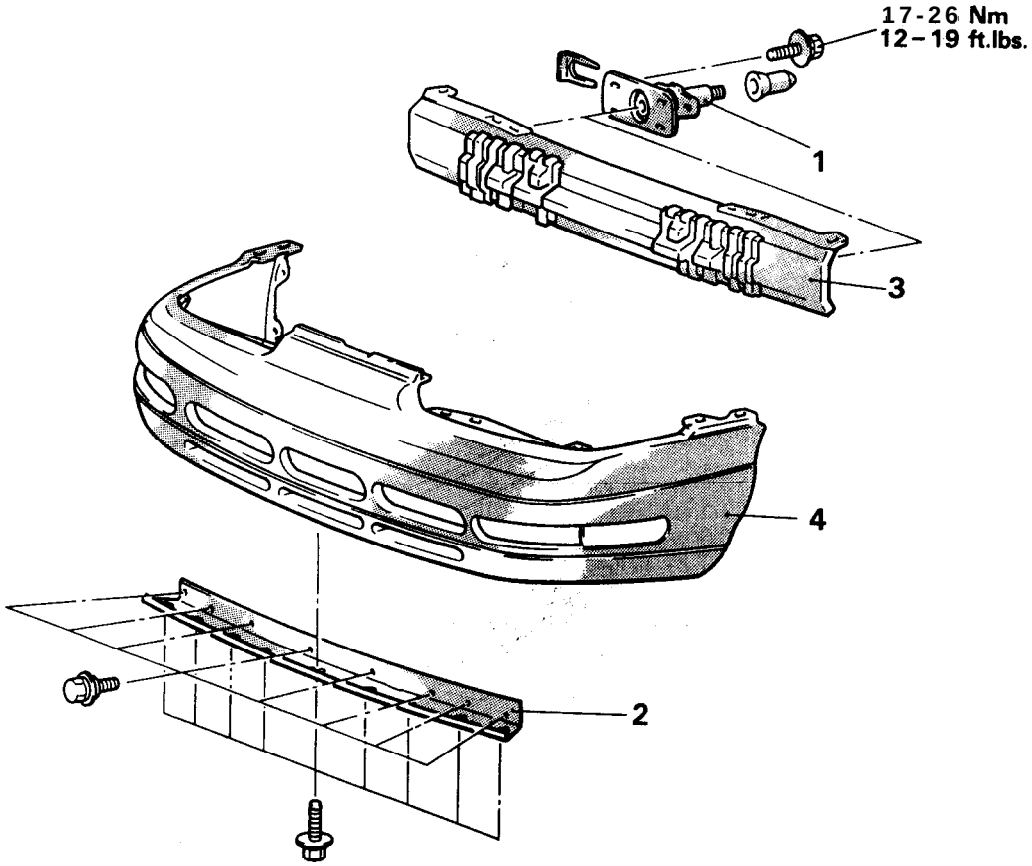

Disassembly steps

◆◆ 1. Bumper absorber
2. Lower plate
3. Front bumper reinforcement
4. Front bumper fascia

NOTE
(1) Reverse the disassembly procedures to reassemble.
(2) ◆◆: Refer to "Service Points of Disassembly".
(3) ● +: Refer to "Service Points of Reassembly".

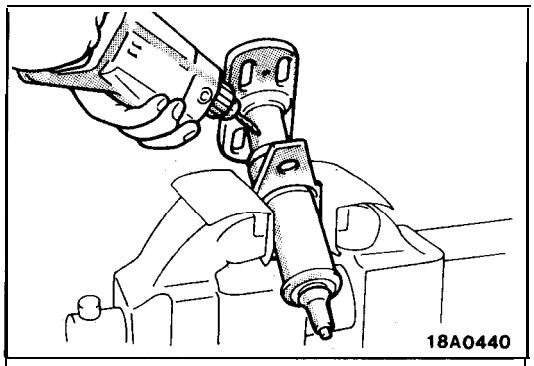

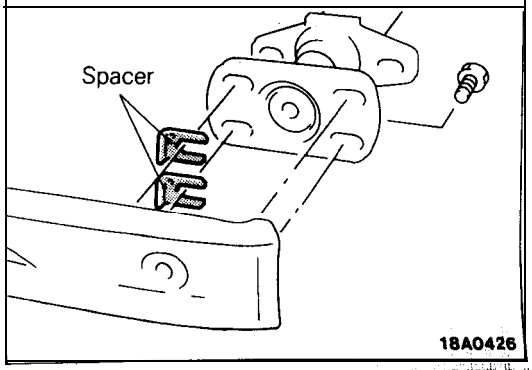

SERVICE POINTS OF DISASSEMBLY

1. REMOVAL OF BUMPER ABSORBER

Caution

1. **Do not attempt to repair a bumper absorber that has been compressed in an accident; replace it with a new one.**
2. **Before discarding the bumper absorber, drill a 3 mm (.13 in.) diameter hole to discharge the gas contained in the unit.**
3. **If the bumper absorber is to be discarded, do not bum it.**

SERVICE POINTS OF REASSEMBLY

1. INSTALLATION OF BUMPER ABSORBER

If the squareness between the front bumper reinforcement and the bumper absorber is improper, adjust it by putting a spacer between them.

REAR BUMPER

N23ZAAZ

REMOVAL AND INSTALLATION

<EAGLE Talon>

Pre-removal Operation
*Removal of Rear End Trim
(Refer to P.23-85.)

Post-installation Operation
*Installation of Rear End Trim
(Refer to P.23-85.)

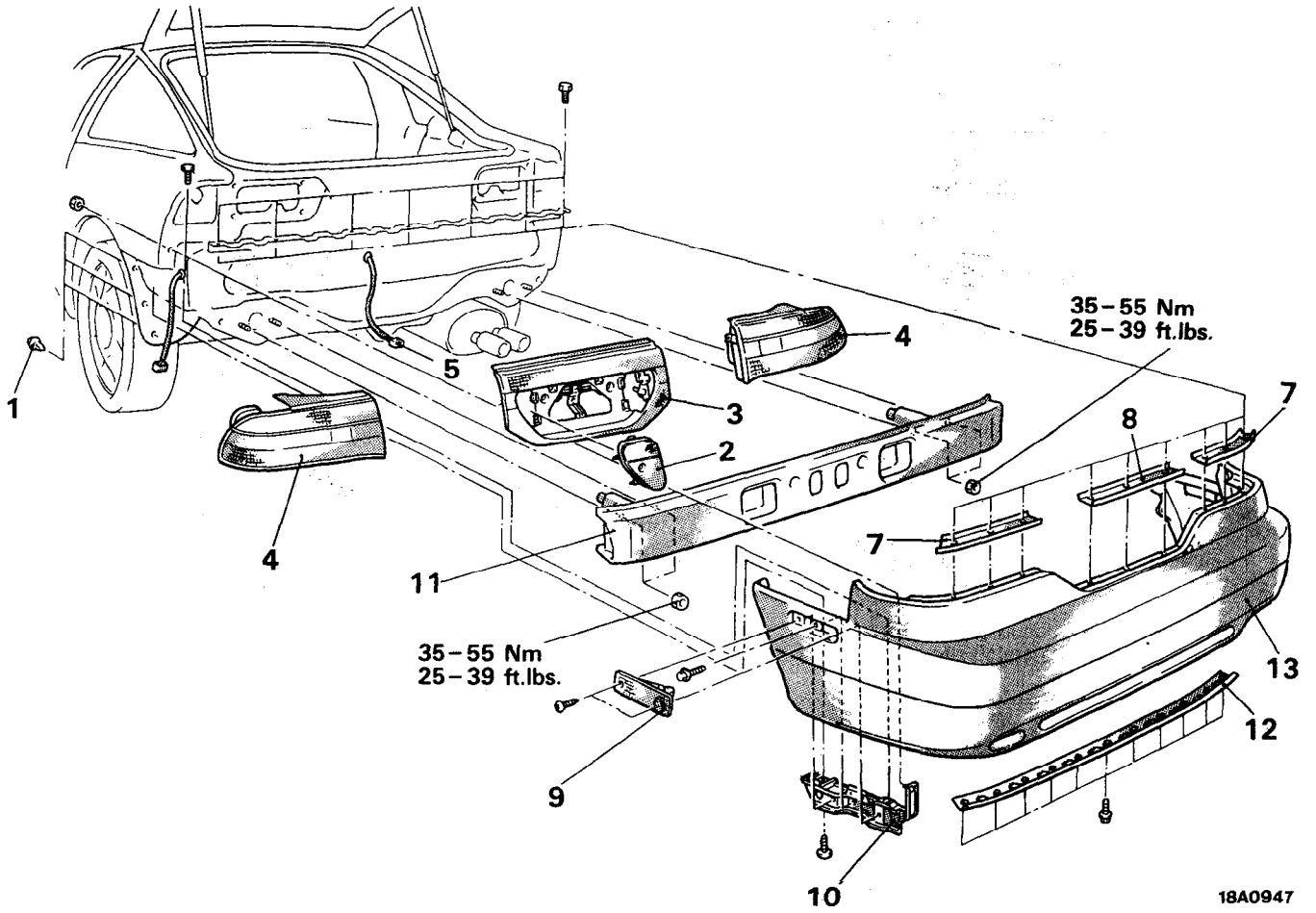

Rear bumper assembly removal steps

1. Splash shield mounting clip
2. Back up light
3. Rear panel garnish
4. Rear combination light
5. Connection for license plate light wiring harness and body wiring harness
6. Rear bumper assembly (No.7-12)
7. Rear fascia side plate
8. Rear fascia upper plate
9. Rear side marker light
10. Rear fascia side plate
11. Rear bumper reinforcement assembly
12. Rear fascia **lower plate**
13. Rear bumper fascia

Rear bumper fascia removal steps

1. Splash shield mounting clip
2. Back up light
3. Rear panel garnish
4. Rear combination light
7. Rear fascia side plate
8. Rear fascia upper plate
9. Rear side marker light
10. Rear fascia side plate
12. Rear fascia lower plate
13. Rear bumper fascia

NOTE
Reverse the removal procedures to reinstall.

<PLYMOUTH Laser>

Pre-removal Operation
- Removal of Rear End Trim (Refer to P.23-85.)

Post-installation Operation
- Installation of Rear End Trim (Refer to P.23-85.)

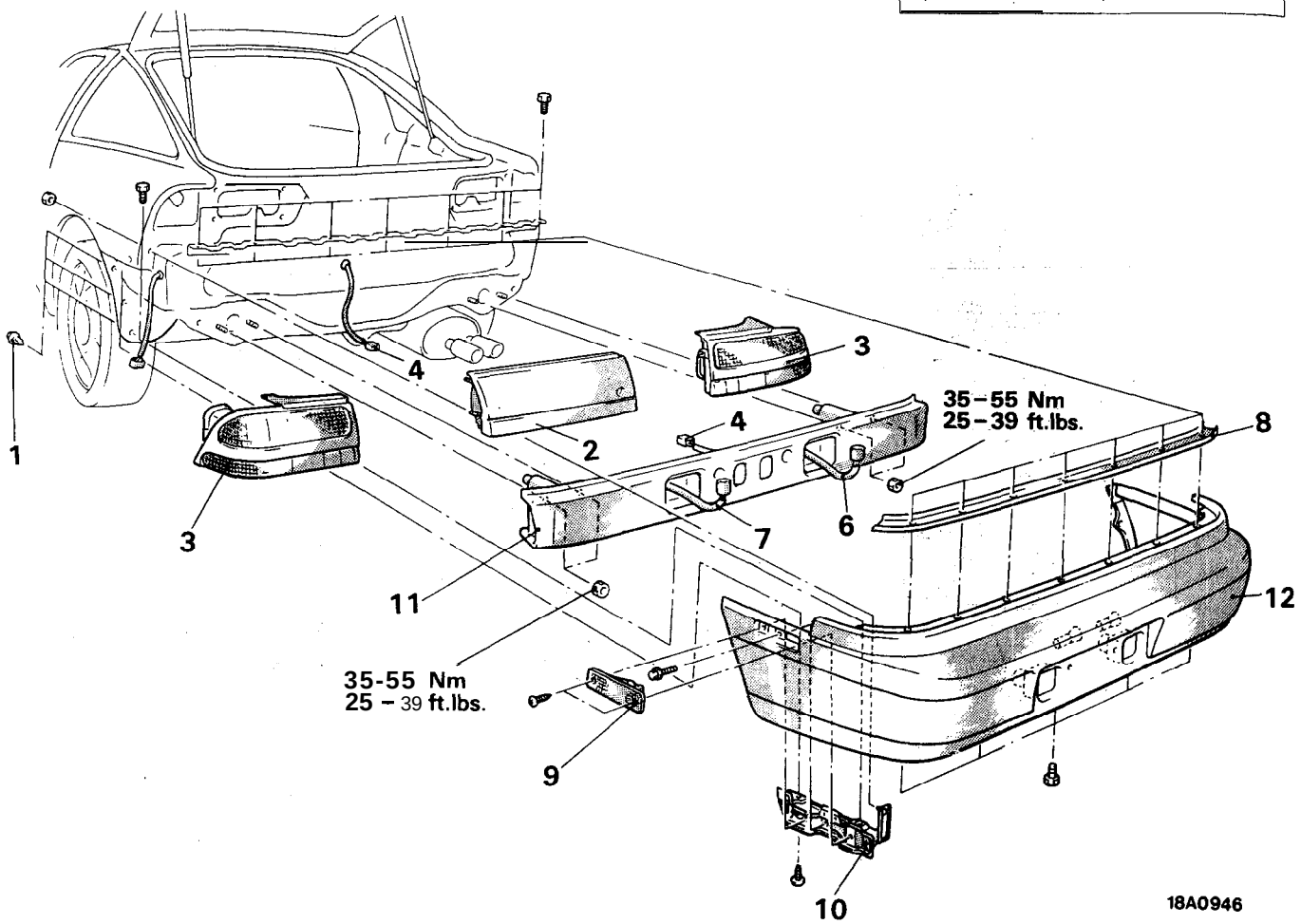

Rear bumper assembly removal steps

1. Splash shield mounting clip
2. Rear panel garnish
3. Rear combination light
4. Connection for license plate light wiring harness and body wiring harness
5. Rear bumper assembly (No.8–13)
8. Fascia plate upper
9. Rear side marker light
10. Rear fascia side plate
11. Rear bumper reinforcement assembly
12. Rear bumper fascia

Rear bumper fascia removal steps

1. Splash shield mounting clip
2. Rear panel garnish
3. Rear combination light
6. License plate light harness connector
7. Back-up light harness connector
8. Fascia plate upper
9. Rear side marker light
10. Rear fascia side plate
12. Rear bumper fascia

NOTE
Reverse the removal procedures to reinstall.

DISASSEMBLY AND REASSEMBLY

<EAGLE Talon>

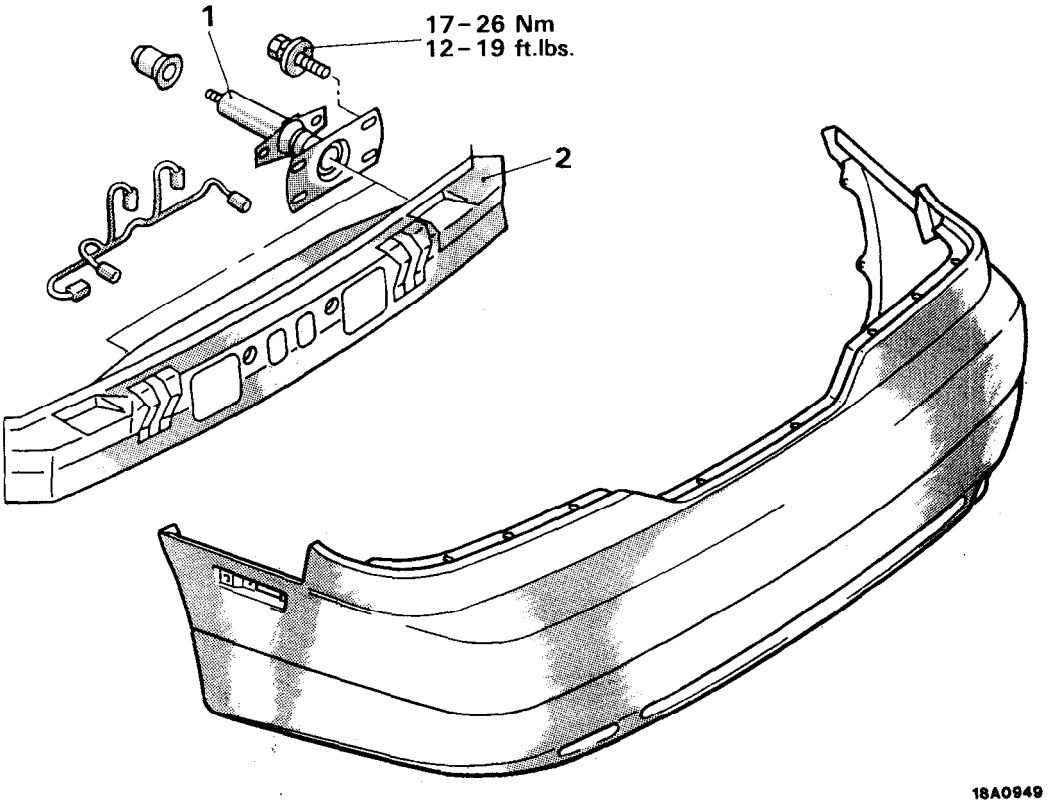

Disassembly steps

◆◆ 1 Bumper absorber
2 Rear bumper reinforcement

NOTE
(1) Reverse the disassembly procedures to reassemble.
(2) ◆◆: Refer to "Service Points of Disassembly".

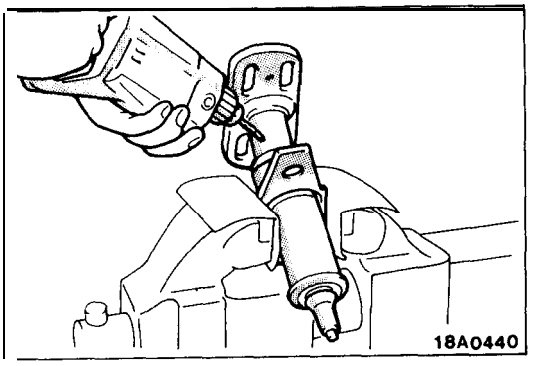

SERVICE POINTS OF DISASSEMBLY

1. REMOVAL OF BUMPER ABSORBER

Caution

1. **Do not attempt to repair a bumper absorber that has been compressed in an accident; replace it with a new one.**
2. **Before discarding the bumper absorber, drill a 3 mm (.13 in.) diameter hole to discharge the gas contained in the unit.**
3. **If the bumper absorber is to be discarded, do not bum it.**

<PLYMOUTH Laser>

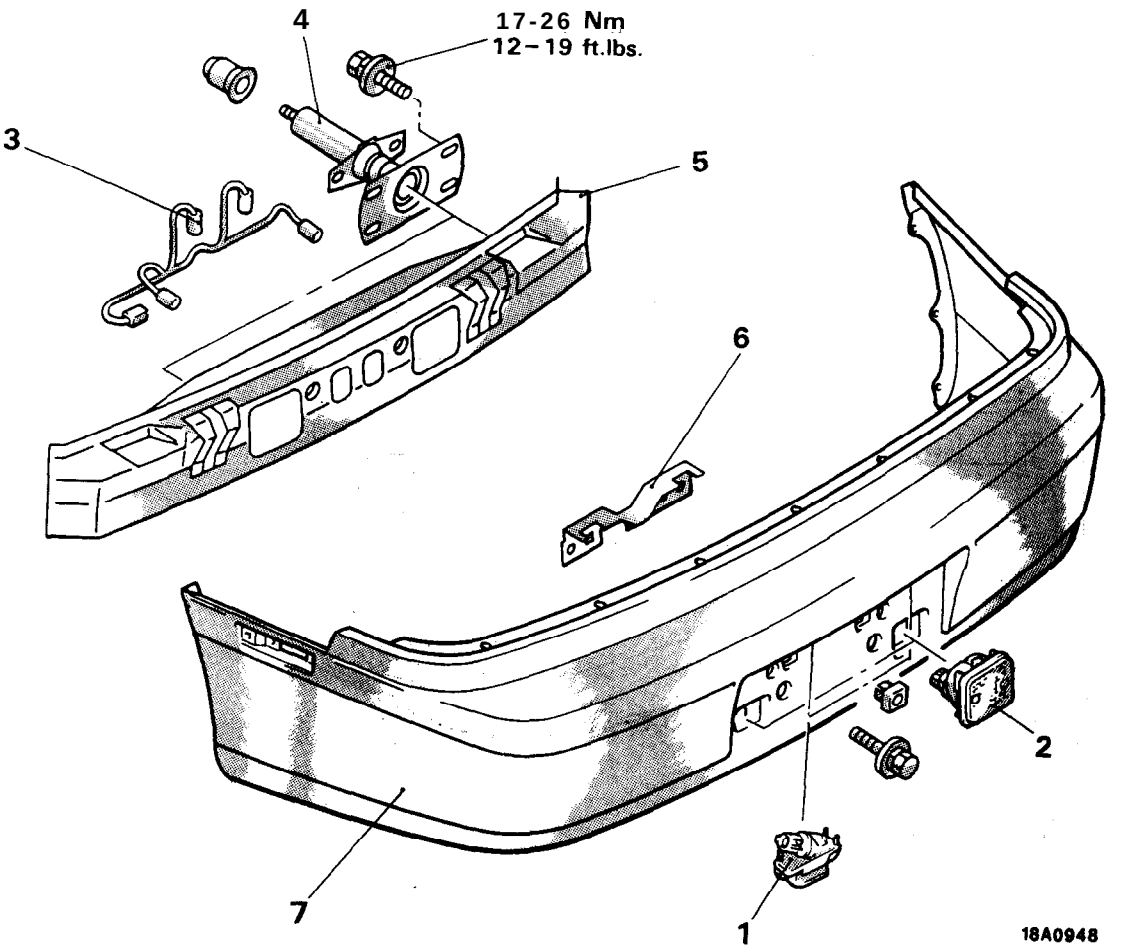

Disassembly steps

1. License plate light
2. Back-up light
3. License plate light wiring harness
4. ◆◆ Bumper absorber
5. Rear bumper reinforcement
6. License plate bracket
7. Rear bumper fascia

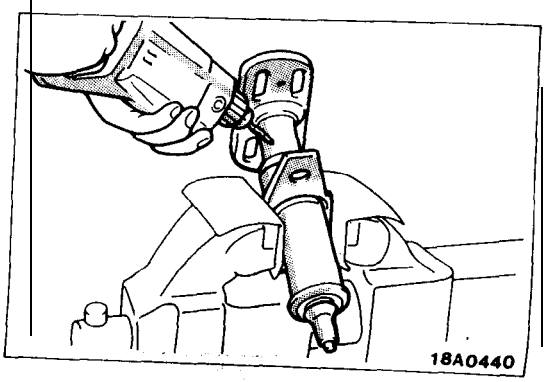

SERVICE POINTS OF DISASSEMBLY

4. REMOVAL OF BUMPER ABSORBER

Caution

1. Do not attempt to repair a bumper absorber that has been compressed in an accident; replace it with a new one.
2. Before discarding the bumper absorber, drill a 3 mm (. 13 in.) diameter hole to discharge the gas contained in the unit.
3. If the bumper absorber is to be discarded, do not burn it

GARNISHES

N23RDAH

REMOVAL AND INSTALLATION

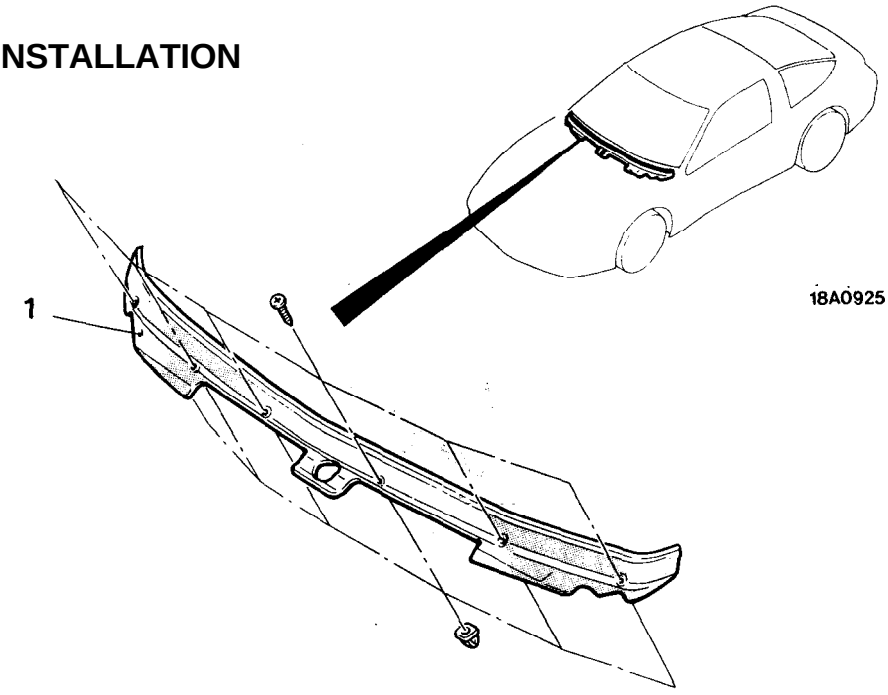

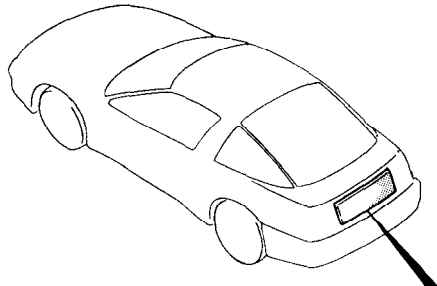

<EAGLE Talon>

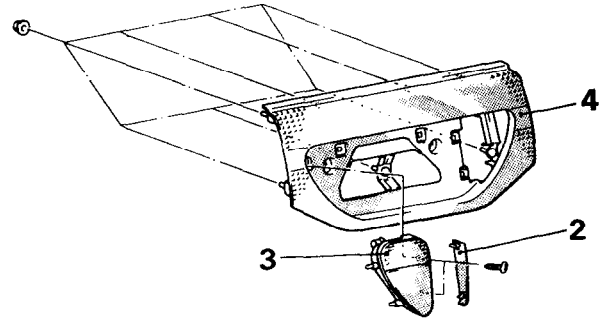

<PLYMOUTH Laser>

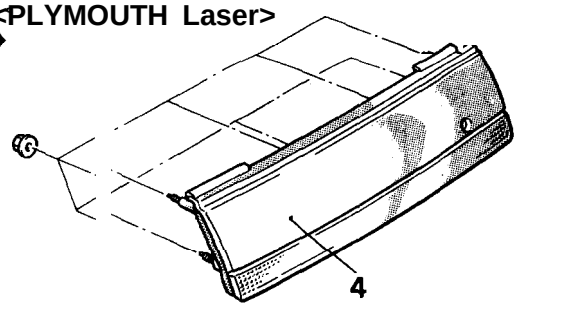

Front deck garnish removal steps

Windshield wiper arms
(Refer to GROUP 8 – Windshield Wiper.)

1. Front deck garnish

Rear panel garnish removal steps

Rear end trim
(Refer to P.23-85.)

2. Cover
3. Back up light
4. Rear panel garnish

NOTE
Reverse the removal procedures to reinstall.

MOULDING

N23REAI

REMOVAL AND INSTALLATION

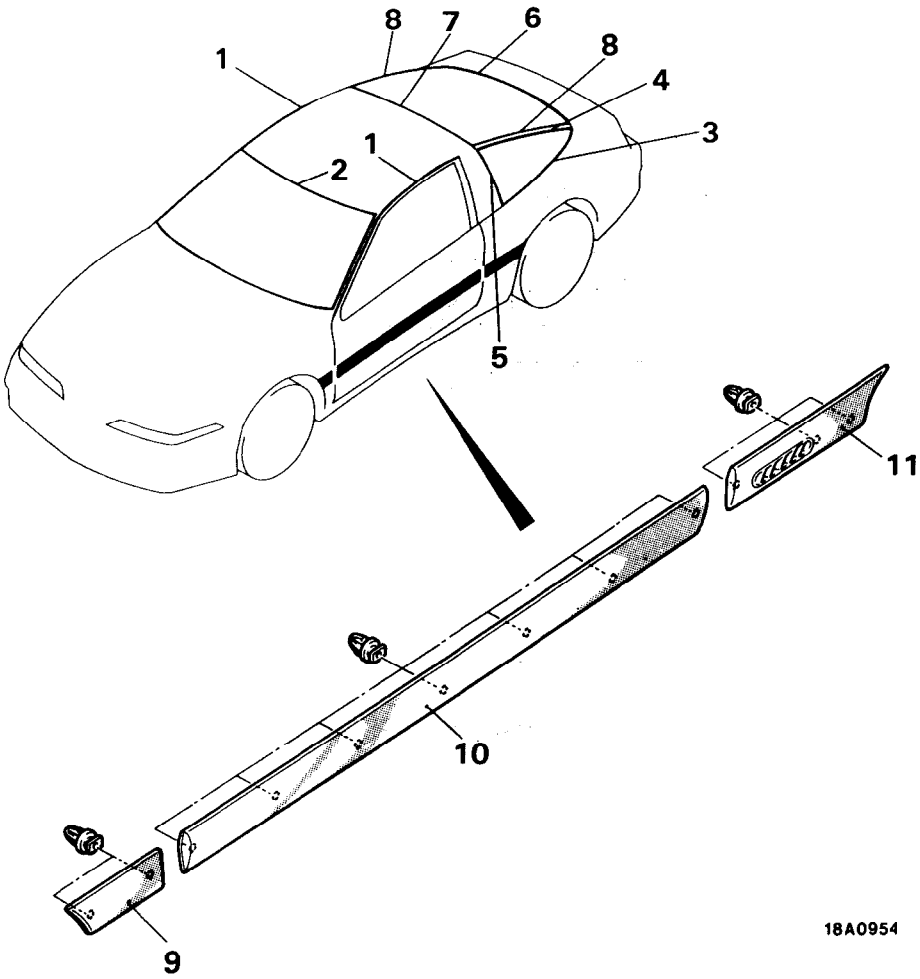

◆◆ 1. Drip moulding
◆◆ 2. Windshield upper moulding
◆◆ 3. Quarter window moulding lower
◆◆ 4. Quarter window moulding upper
◆◆ 5. Quarter window moulding front
◆◆ 6. Liftgate moulding lower
◆◆ 7. Liftgate moulding upper
◆◆ 8. Liftgate moulding side
◆◆●◆ 9. Side protect moulding fender
◆◆●◆ 10. Side protect moulding front door
◆◆●◆ 11. Side protect moulding quarter

NOTE
(1) ◆◆: Refer to "Service Points of Removal".
(2) ● +: Refer to "Service Pdints of Installation".

SERVICE POINTS OF REMOVAL

1. REMOVAL OF DRIP MOULDING

Refer to P.23-70.

2. REMOVAL OF WINDSHIELD UPPER MOULDING

Refer to P.23-56.

3. REMOVAL OF QUARTER WINDOW MOULDING LOWER/ 4. QUARTER WINDOW MOULDING UPPER/B. QUARTER WINDOW MOULDING FRONT

Refer to P.23-59.

6. REMOVAL OF LIFTGATE MOULDING LOWER/7. LIFTGATE MOULDING UPPER/8. LIFTGATE MOULDING SIDE

Refer to P.23-60.

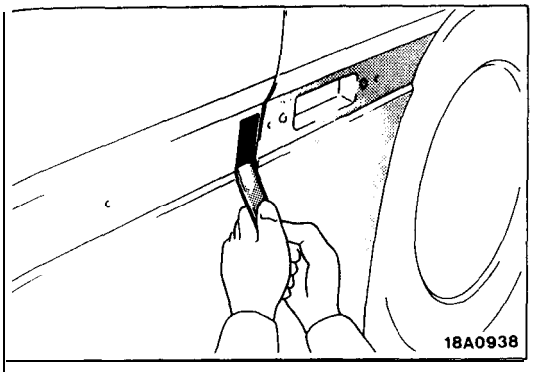

9. REMOVAL OF SIDE PROTECT MOULDING FENDER/ 10. SIDE PROTECT MOULDING FRONT DOOR/I 1. REMOVAL OF SIDE PROTECT MOULDING QUARTER

(1) Using the plastic trim tool, pry off the side protect moulding.

(2) Using the plastic trim tool, scale off the both-side adhesive tape which sticks to the body.

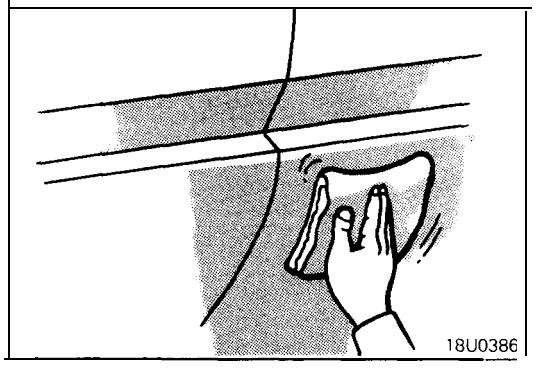

SERVICE POINTS OF INSTALLATION

9. INSTALLATION OF SIDE PROTECT MOULDING FENDER/10. SIDE PROTECT MOULDING FRONT DOOR/ 11. SIDE PROTECT MOULDING QUARTER

(1) Wipe off application surface of body with clean cloth dampened with degreaser (MOPAR SUPER KLEEN or equivalent).

NOTE
After wiping surface, leave surface as it is to volatilize degreaser.

(2) Using an infrared light or similar instrument, heat the body painted surface and the side protect moulding.

Heating temperature
Body painted surface..... 25–55°C (77–131°F)
Side protect moulding.... 25–40°C (77–104°F)

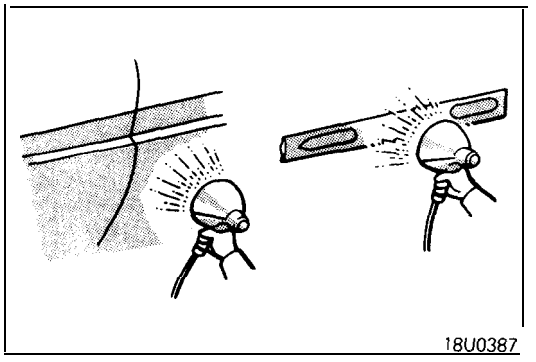

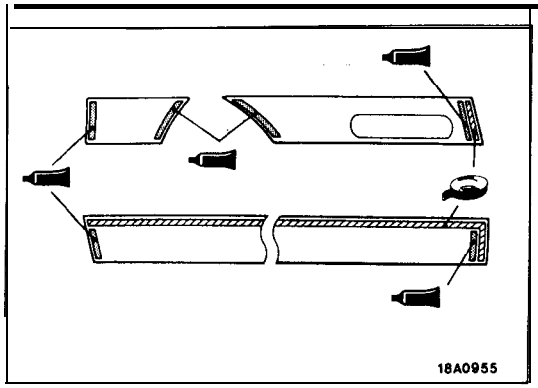

(3) Remove backing paper from adhesive tape, and apply specified adhesive tape as shown in the illustration,

Specified adhesive tape:
3M ATD Part No. 6383 or equivalent

(4) Apply specified sealant to the places shown in the illustration.

Specified sealant: 3M Super Fast Urethane Primer Part No. 8608 or equivalent

(5) Attach the side protect mouldings at the places shown in the illustration.

(6) Use hand roller or similar tool to apply even pressure to entire surface of moulding.

NOTE
Press moulding ends firmly against the body surface.

Side protect moulding mounting positions

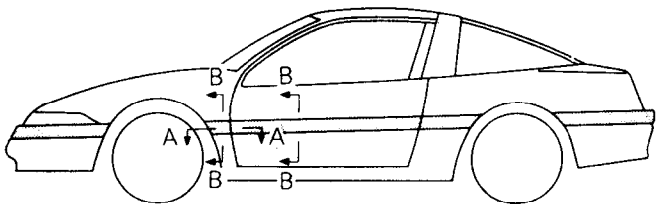

18A0400

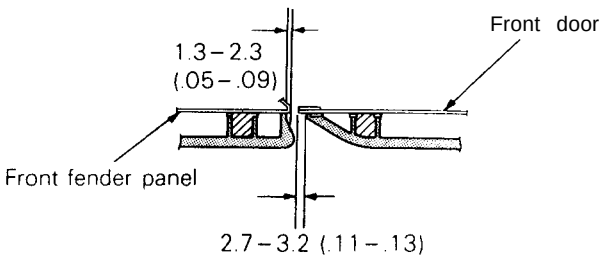

Section A-A

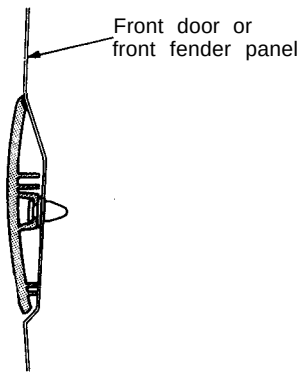

Section B-B

18A0942

FENDER

N23KAAT

REMOVAL AND INSTALLATION

Pm-removal Operation
- Removal of Front Garnish (Refer to P.23-45.)
- Removal of Front Turn Signal Light and Front Combination Light (Refer to GROUP 8–Front Combination Light)
- Removal of Headlight Lower Bezel (Refer to GROUP 8–Headlights)
- Removal of Side Air Dam (Refer to P.23-72)

Post-installation Operation
- Installation of Side Air Dam (Refer to P.23-72.)
- Installation of Headlight Lower Bezel (Refer to GROUP 8–Headlight)
- Installation of Front Turn Signal Light and Front Combination Light (Refer to GROUP 8–Front Combination Light)
- Installation of Front Garnish (Refer to P.23-45.)

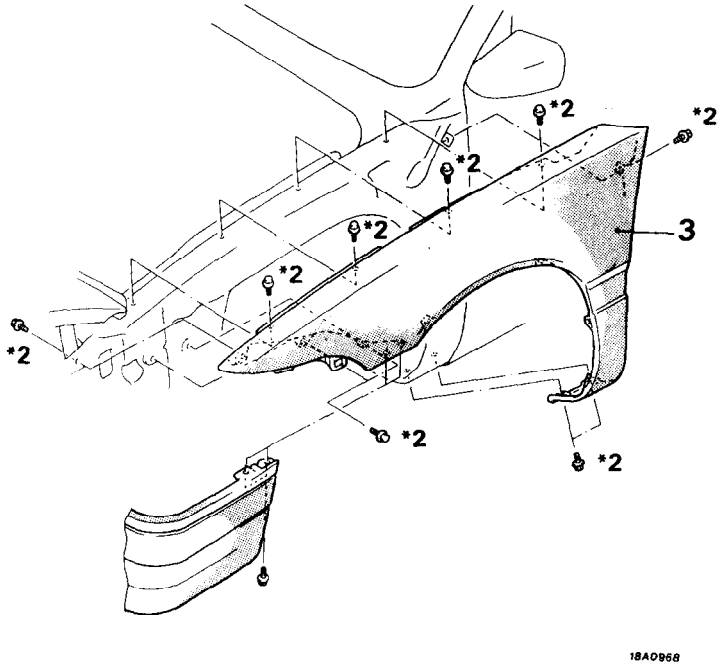

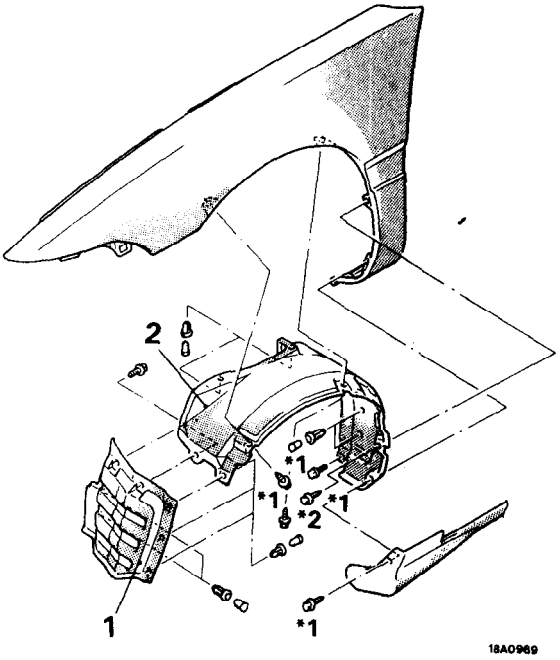

Removal steps

1. Front splash shield extension
- ◆ C 2. Front splash shield
- ◆◆ 3. Front fender panel

NOTE
(1) Reverse the removal procedures to reinstall.
(2) ◆◆: Refer to "Service Points of Installation".
(3) • 1 : This shows a tightening torque of 2.0-2.2 Nm (1.4–1.6 ft.lbs.).
(4) • 2 : This shows a tightening torque of 4-6 Nm (2-4 ft.lbs.).

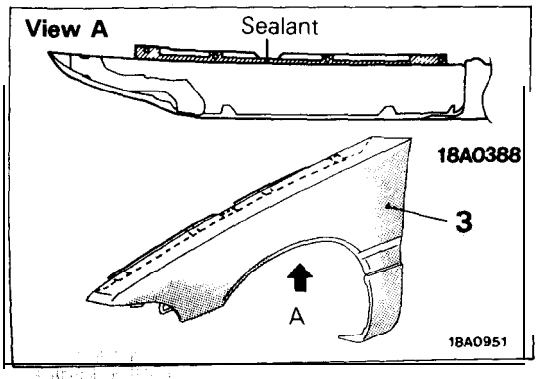

SERVICE POINTS OF INSTALLATION

3. APPLICATION OF SEALANT TO FRONT FENDER PANEL

When installing the fenders, apply specified sealant between the fenders and the body panels, so that there are no gaps when the fenders are mounted.

Specified sealant: MOPAR Silicone Rubber Sealer Part No.4026070 or equivalent

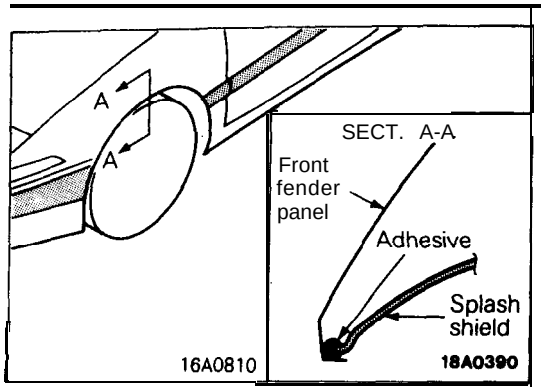

2. APPLICATION OF ADHESIVE TO SPLASH SHIELD-

When installing the splash shield, apply specified adhesive to the flange part of the fender.

Specified adhesive: **MOPAR** Silicone **Rubber Sealer Part No. 4026070 or Auto** Glass **Adhesive and Sealer Part** No. **2299925** or equivalent

LOOSE PANEL

N23SAAK

REMOVAL AND INSTALLATION

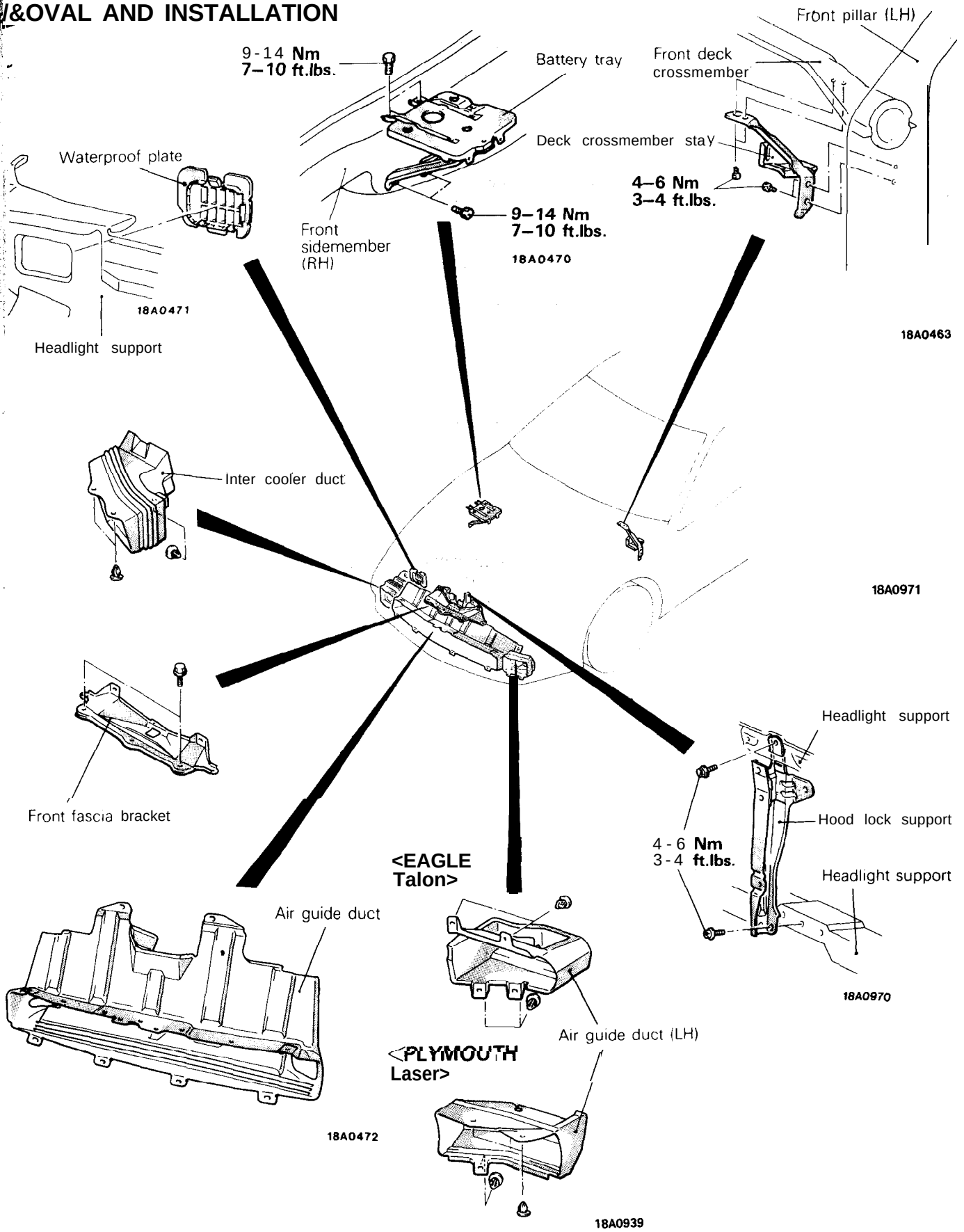

AERO PARTS

N23XAAL

REMOVAL AND INSTALLATION

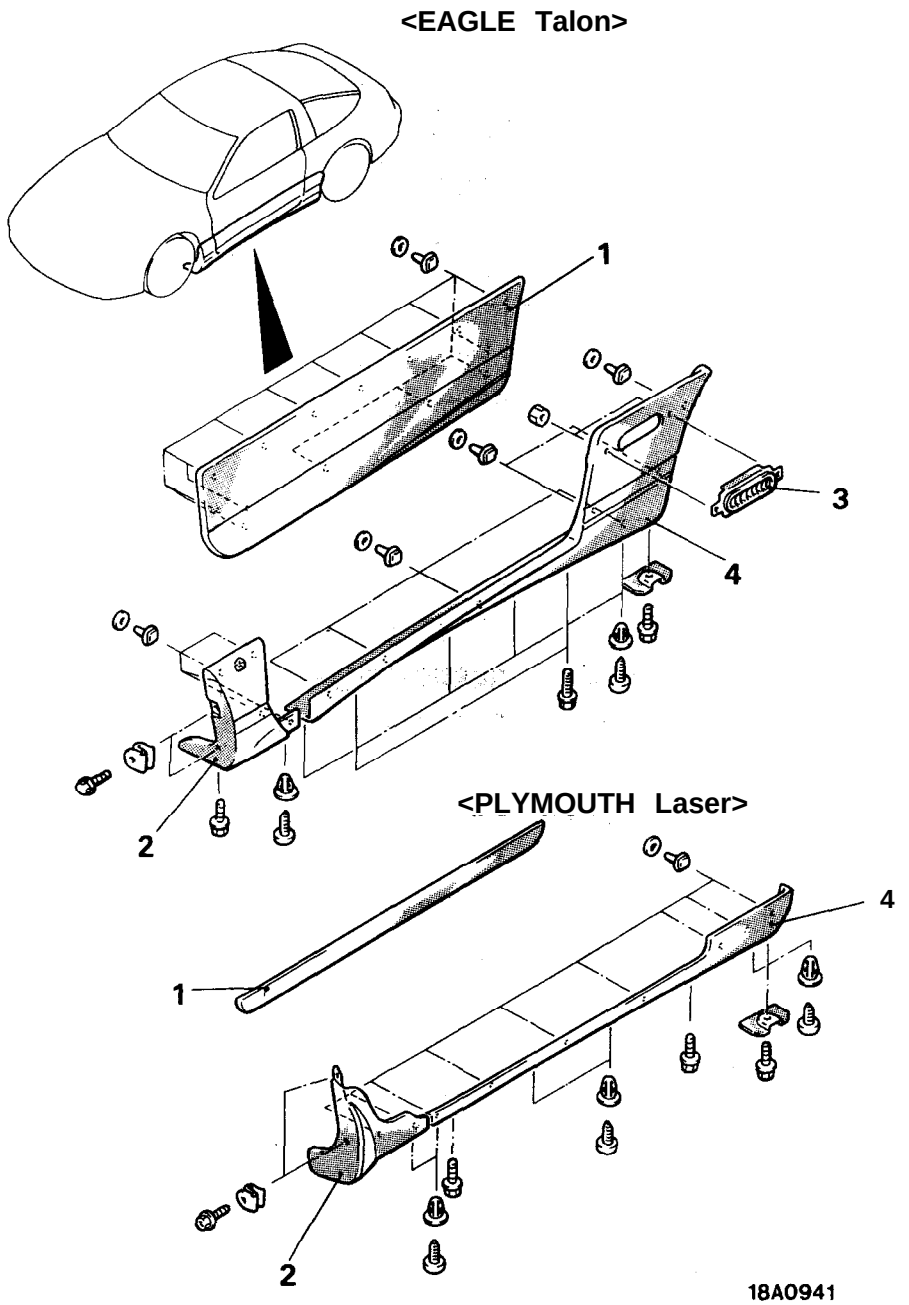

Side air dam removal steps

<EAGLE Talon>

Quarter trim
(Refer to P.23-85.)

◆◆ 1. Door side garnish
2. Front side air dam
3. Air outlet garnish
◆◆◆◆ 4. Rear side air dam

<PLYMOUTH Laser>

◆◆ 1. Door side garnish
2. Front side air dam
◆◆◆◆ 4. Rear side air dam

<EAGLE Talon>

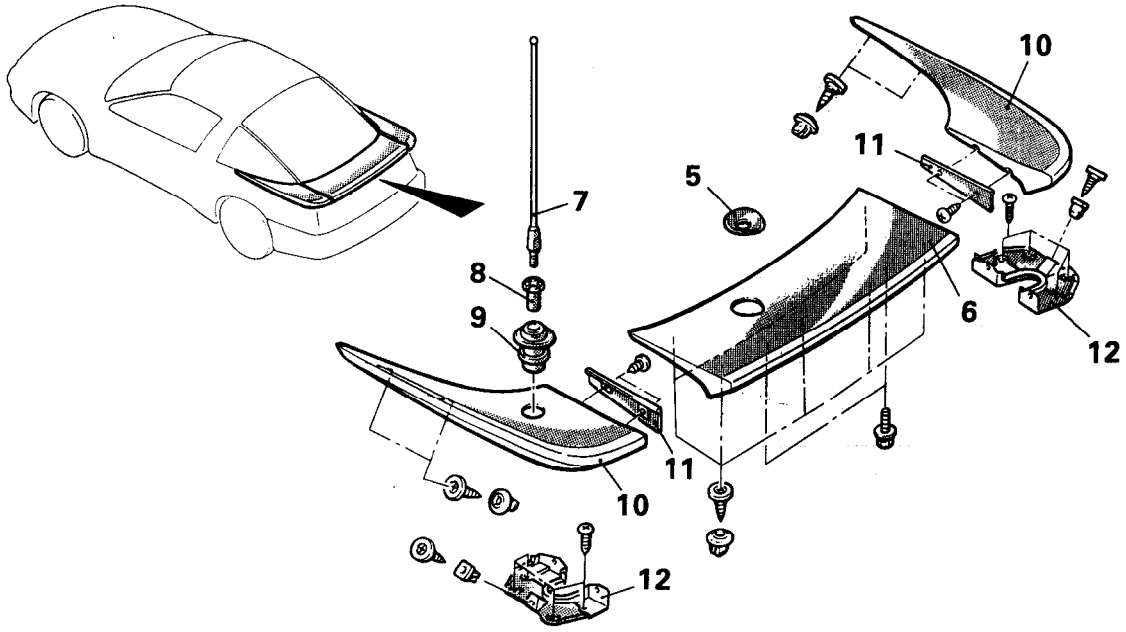

<PLYMOUTH Laser>

18A1004

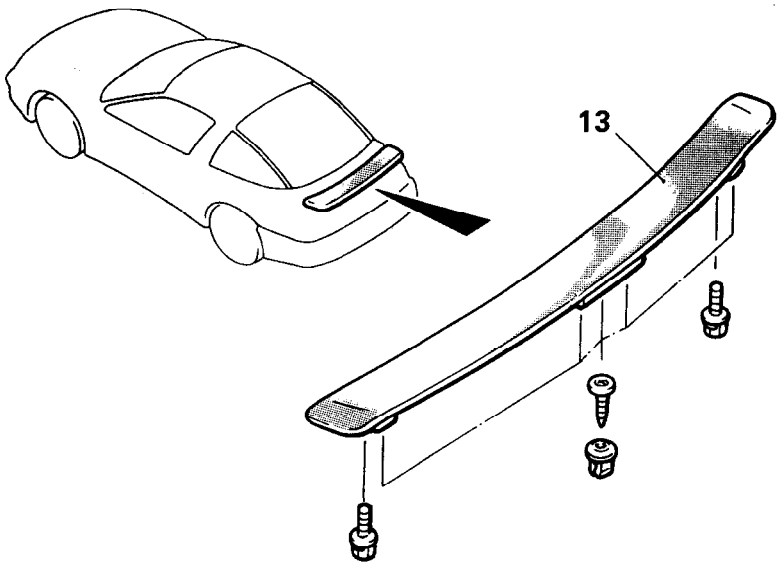

18A0967

Rear air spoiler assembly (center) removal steps <EAGLE Talon>

Rear wiper
(Refer to GROUP 8 – Rear Wiper.)
Liftgate trim (Refer to P.23-89.)
High mounted stop light
(Refer to GROUP 8 – Lighting System.)
5. Rear wiper grommet
6. Rear air spoiler assembly (center)

Rear air spoiler assembly (side) removal steps <EAGLE Talon>

7. Mast antenna
8. Mountina nut
9. Mounting insulator
● 410. Rear air spoiler assembly (side)
11. Air spoiler cover
12. Air spoiler bracket assembly

Rear air spoiler removal steps <PLYMOUTH-AWD>

Liftgate trim (Refer to P.23-89.)
High mounted stop light
(Refer to GROUP 8 – Lighting **System.)**
13. Rear air spoiler

NOTE
(1) Reverse the removal procedures to reinstall.
(2) ● *: Refer to "Service Points of Removal".
(3) ● a: Refer to "Service Points of Installation".

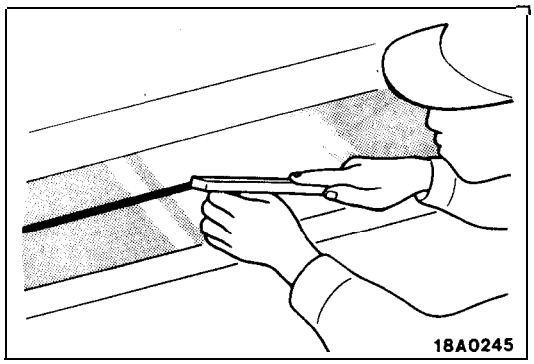

SERVICE POINTS OF REMOVAL

1. REMOVAL OF SIDE AIR DAM (DOOR)/4. SIDE AIR DAM

(1) After the mounting screws are removed, apply the plastic trim tool to the bonding and clipped areas to remove the side air dam.

(2) Scale off the both-side adhesive tape with the plastic trim tool.

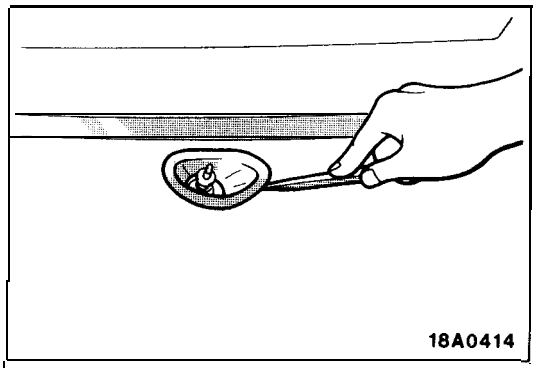

5. REMOVAL OF REAR WIPER GROMMET

Remove the rear wiper grommet with the plastic trim tool.

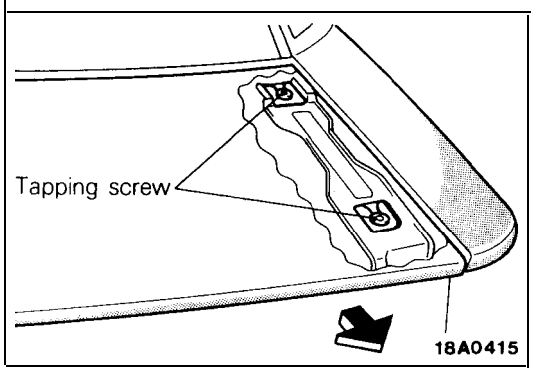

6. REMOVAL OF REAR AIR SPOILER ASSEMBLY (CENTER)/ 10. REAR AIR SPOILER ASSEMBLY (SIDE)/13. REAR AIR SPOILER

After the rear air spoiler mounting bolts or screws have been removed, move the rear air spoiler to the rear of the vehicle, remove the rear air spoiler from the tapping screws, and pull off the rear air spoiler.

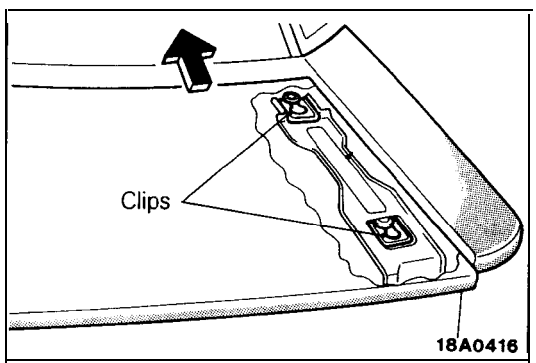

SERVICE POINTS OF INSTALLATION

13. INSTALLATION OF REAR AIR SPOILER/10. REAR AIR SPOILER ASSEMBLY (SIDE)/6. REAR AIR SPOILER ASSEMBLY (CENTER)

Install the rear air spoiler in position so that its clips are held by the tapping screws.

NOTE

When the clip remains on the body side, securely attach the clip to the rear air spoiler, and mount them.

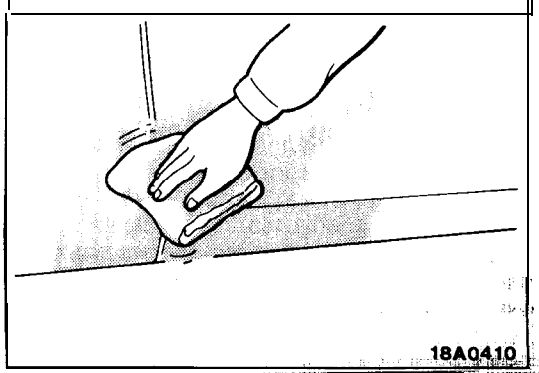

4. INSTALLATION OF REAR SIDE AIR DAM

(1) Wipe off application surface of body with clean cloth dampened with degreaser (MOPAR SUPER KLEEN or equivalent).

NOTE

After wiping surface, leave surface as it is to volatilize degreaser.

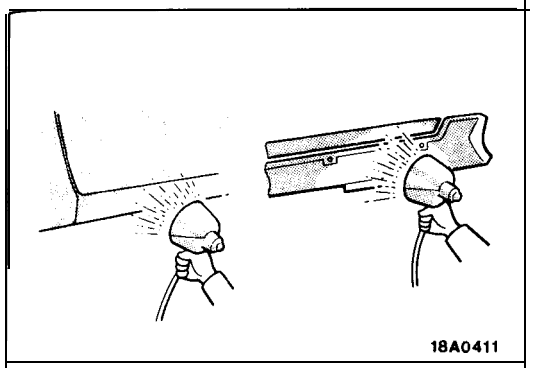

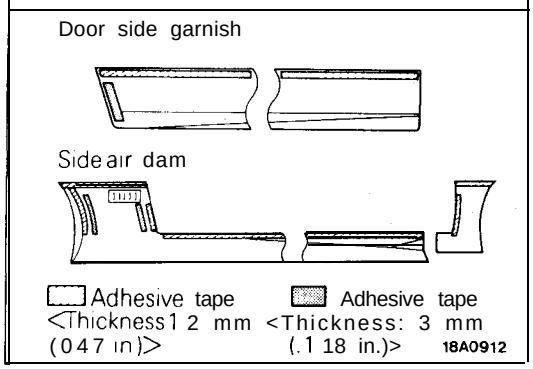

(2) Using an infrared light or similar instrument, heat the body painted surface and the side air dam.

Heating temperature
Body painted surface.. . . . 25–55°C (77– 131 °F)
Side air dam . . . . . 25–40°C (77–104°F)

(3) Peel off the paper from the-adhesive tape, apply specified adhesive and sealant at the places shown in the figure, and attach to the body adhesive surface.

Specified adhesive tape: 3M ATD Part No. 6383 or equivalent

(4) Using a hand roller or similar tool, apply pressure to the entire surface of the side air **dam.**

NOTE
The ends of the side air dam tend to loosen easily, so apply manual pressure again.

Side air dam positions

<EAGLE Talon>

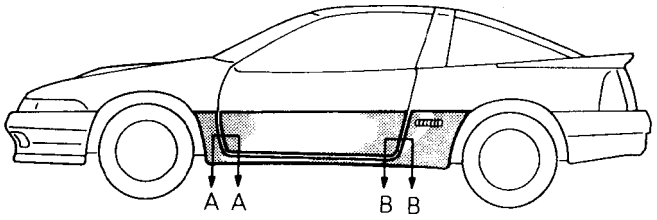

18A0940

Section A-A

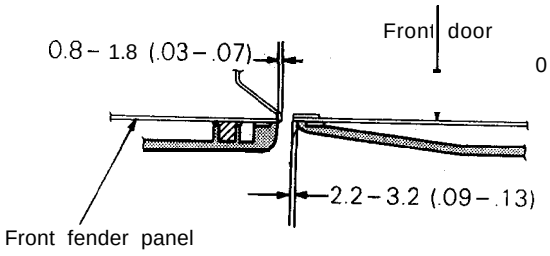

Section B-B

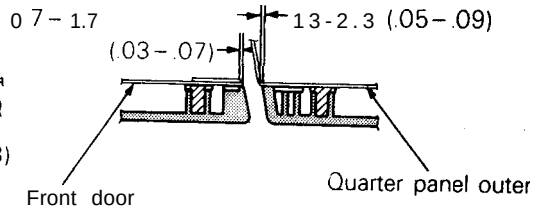

18A0944

<PLYMOUTH Laser>

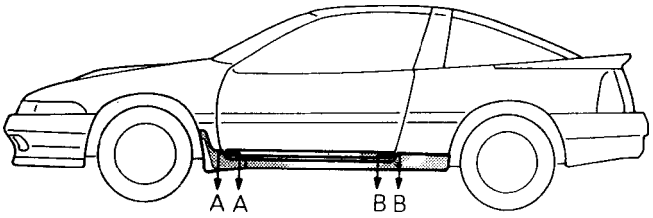

18A0940

Section A-A

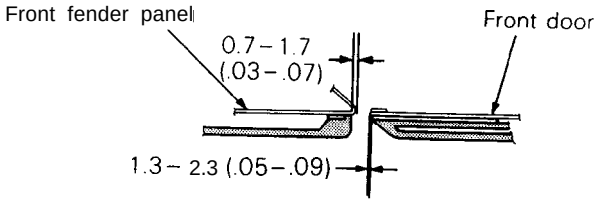

Section B-B

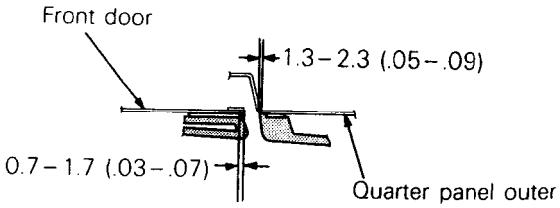

18A0943